REMA®

HOISTING & LIFTING



Catalogue

Hoisting and lifting solutions

Work made easy.

26

1 Hoisting devices



2 Trolleys and beam components



3 Measure and control equipment



4 Winches and snatch blocks



5 Lifting devices



6 Lifting slings, chains and lifting points



7 Load securing and lashing



8 Workshop tools



9 Pallet handling



10 Personal fall protection



11 Cranes and accessories



1

Hand chain hoists 6

Lever hoists 20

Electric chain hoists 27

Wire rope hoists 40

Radio remote control 42



Selection guide - hand chain hoists



Elephant C-21

Lightweight and compact hand chain hoist of high industrial quality.

Key Features

- Low self-weight and robust design.
- Ideal for industrial and maintenance applications.

500 kg - 5.000 kg

Page 7



Elephant H100

Premium-quality hand chain hoist with precision bearings. Designed for intensive use.

Key Features

- Suitable for heavy-duty and offshore applications.
- Exceptionally smooth operation.

500 kg - 5.000 kg

Page 8



Rema SELECT 200-OD

Equipped with overload protection for safe lowering, in case of overload.

Key Features

- Safe operation.
- Protects both hoist and structure from overload.
- 500 kg to >10 t with overload protection.

250 kg - 30.000 kg

Page 12-13



Rema X-LINE

Extremely robust design with low operating effort. Highly versatile and reliable.

Key Features

- Equivalent to Select 200-OD model, but without overload protection.

250 kg - 10.000 kg

Page 14



Rema BLACKLINE

Theatre hoist. Identical to X-Line but supplied in a black finish for stage and entertainment use.

Key Features

- Designed for theatre and stage rigging.
- Black body, top and bottom hooks black-chromed.

250 kg - 500 kg

Page 15



Elephant HOISTMAN

Lightweight compact hand chain hoist for small lifting applications.

Key Features

- Extremely low self-weight of 3 kg.
- Ideal for installation and maintenance tasks.

150 kg - 250 kg

Page 9



Elephant PIH / H100

Modified version of H100, adapted for cleanroom applications.

Key Features

- Chrome-plated covers, side plates, load chain, and hooks.
- Designed for environments with strict hygiene requirements.

500 kg - 2.000 kg

Page 10



Rema RIH

Stainless-steel hand chain hoist – body, chain, and hooks.

Key Features

- Ideal for food, chemical, and water treatment industries.

500 kg - 1.000 kg

Page 11



Rema S20P

Select 200-OD hoist directly integrated with a push-type trolley.

Key Features

- Compact design for limited headroom.
- Traversable by pushing against the load.

500 kg - 5.000 kg

Page 16



Rema S20G

Select 200-OD hoist directly integrated with a geared trolley.

Key Features

- Compact design for limited headroom.
- Traversable via hand chain drive.

500 kg - 5.000 kg

Page 17



Rema AL360

Specially designed lightweight aluminium hand chain hoist with a 360° rotatable hand chain cover

Key Features

- 360° rotatable hand chain cover for control and handel in every angle.
- Aluminium hoising.

250 kg - 500 kg

Page 18



Rema KBT

Specially designed hoist-trolley combination providing an extremely low headroom.

Key Features

- Maximum lifting height even in confined spaces, such as machine rooms.
- Traversable via hand chain drive.

1.000 kg - 6.300 kg

Page 19

Elephant C-21 hand chain hoist



The Elephant C-21 is a robust and premium quality manual chain hoist. Safety factor of at least 4.8 or higher. Extremely compact and lightweight body (5.5 kg at 0.5 t), easy to carry. Strong and rigid housing made of high-quality steel. Durable brake discs ensure a long service life. Equipped with the strongest load chain B39VH, Grade 10. High-quality solid-forged hooks fitted with strong and stable safety latches for maximum safety.

Features

- Ideal hoist for assembly work, Grade 10 (VH), thanks to its low self-weight.
- Galvanized load chain with high tensile strength (G10 according to EN 818-7).
- Compact construction.
- Reliable load-pressure brake holds the load at any desired height.
- Hooks equipped with safety latches.
- Patented chain guide.
- Equipped with a double pawl spring for additional safety.
- Load hooks bend gradually under overload and do not break abruptly.
- Galvanized hand chain.

Standard delivery

- Standard lifting height: 3 m (distance between upper and lower hooks).
- Standard operating height: 2.5 m.

Options

- Other lifting and operating heights available on request.

0.5 - 2.0 t

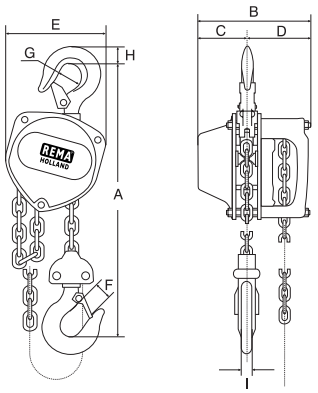

3.0 t

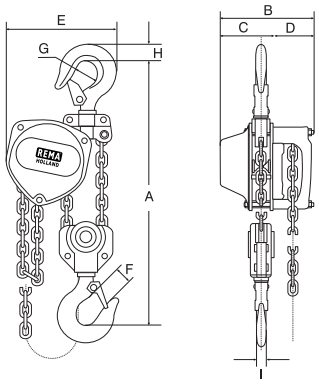

5.0 t

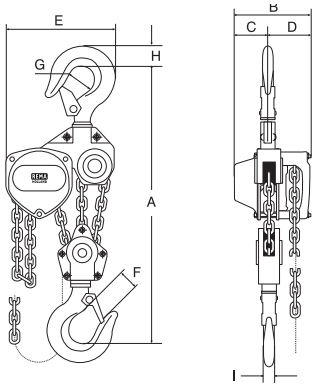

Type	WLL (kg)	Hand force max. (kg)	Load chain DxT (mm)	Number of falls	Hand chain DxT (mm)	Headroom (mm)	Weight (kg)	Article number
C21-500KG	500	26	4,3 x 12,0	1	4,5 x 23,0	275	5,5	**0021001**
C21-1000KG	1.000	32	5,6 x 17,0	1	4,5 x 23,0	310	8,9	**0021003**
C21-1500KG	1.500	33	6,5 x 19,0	1	4,5 x 23,0	360	12,6	**0021005**
C21-2000KG	2.000	33	7,5 x 21,0	1	4,5 x 23,0	384	16,6	**0021007**
C21-3000KG	3.000	38	6,5 x 19,0	2	4,5 x 23,0	480	19,3	**0021009**
C21-5000KG	5.000	34	7,5 x 21,0	3	4,5 x 23,0	555	34,0	**0021011**

Type	A (mm)	B (mm)	C (mm)	D (mm)	E (mm)	F (mm)	G (mm)	H (mm)	I (mm)
C21-500KG	275	131	54	77	121	24	36	17	13
C21-1000KG	310	143	61	82	148	29	43	22	16
C21-1500KG	360	152	68	84	168	29	43	26	21
C21-2000KG	384	164	75	89	193	34	53	29	22
C21-3000KG	480	152	68	84	209	36	53	35	28
C21-5000KG	555	164	75	89	297	45	70	46	34

Elephant H-100 hand chain hoist



The Elephant H-100 is a robust manual chain hoist designed for heavy and intensive use, where safety, ergonomics, and low operating effort are paramount.

Features

- Low operating effort at maximum load thanks to needle bearings.
- Double pawl system with double spring.
- Load-pressure brake that holds the load securely at any desired height.
- Upper and lower hooks fitted with safety latches.
- Under overload, hooks bend gradually and do not break abruptly.
- Patented chain guide for the load chain.
- Galvanized load chain (G10 (VH) according to EN 818-7).
- Galvanized hand chain.

Standard delivery

- Standard lifting height: 3 m (distance between upper and lower hooks).
- Standard operating height: 2.5 m.

Options

- Other lifting and operating heights available on request.

0.5 - 2.0 t

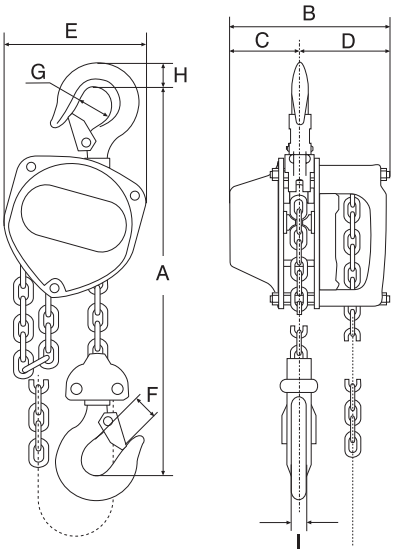

3.1 - 5.0 t

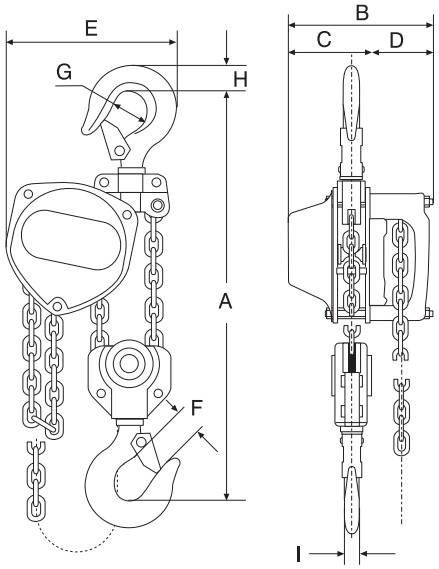

Type	WLL (kg)	Hand force max. (kg)	Load chain DxT (mm)	Number of falls	Hand chain DxT (mm)	Headroom (mm)	Weight (kg)	Article number
H100-500KG	500	22	5,0 x 15,0	1	5,0 x 23,7	277	9,0	**0100001**
H100-1000KG	1.000	26	6,3 x 19,1	1	5,0 x 23,7	303	11,4	**0100003**
H100-1600KG	1.600	34	7,1 x 21,0	1	5,0 x 23,7	338	14,7	**0100005**
H100-2000KG	2.000	34	8,0 x 24,0	1	5,0 x 23,7	379	21,0	**0100007**
H100-3100KG	3.100	36	7,1 x 21,0	2	5,0 x 23,7	516	24,0	**0100009**
H100-5000KG	5.000	36	9,0 x 27,0	2	5,0 x 23,7	613	39,5	**0100011**

Type	A (mm)	B (mm)	C (mm)	D (mm)	E (mm)	F (mm)	G (mm)	H (mm)	I (mm)
H100-500KG	277	155,0	65	90,0	140	26	36	17	13
H100-1000KG	303	160,0	69	91,0	160	30	43	22	16
H100-1600KG	338	167,5	75	92,5	183	35	48	27	20
H100-2000KG	379	183,0	83	100,0	215	38	53	29	22
H100-3100KG	516	167,5	75	92,5	230	44	60	37	27
H100-5000KG	613	190,0	90	100,0	282	53	70	46	34

Elephant HOISTMAN hand chain hoist



Only 2.8 kg
2.5 m lifting height

The Elephant HOISTMAN is a lightweight mini manual chain hoist. Extremely compact, making it ideal for use in very confined spaces and where low self-weight is required.

Features

- Chrome-plated steel body.
- Low operating effort at maximum load thanks to bearing-mounted shafts.
- Double pawl system.
- Upper and lower hooks fitted with safety latches.
- Under overload, hooks bend gradually and do not break abruptly.
- Galvanized load chain (G10 VH according to EN 818-7).
- Galvanized hand chain.

Standard delivery

- Lifting height: 2.5 m (distance between upper and lower hooks).
- Operating height: 2 m.

Options

- Other lifting and operating heights available on request.

150 / 250 kg

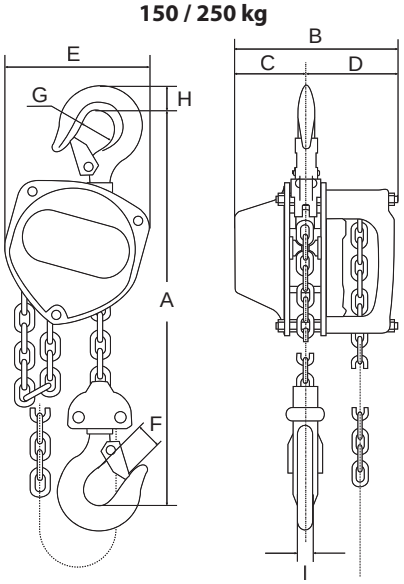



Type	WLL (kg)	Hand force max. (kg)	Load chain DxT (mm)	Number of falls	Hand chain DxT (mm)	Headroom (mm)	Weight (kg)	Article number
HOISTMAN-150KG	150	17	3,1 x 9,3	1	2,5 x 14,0	220	2,8	**0100000**
HOISTMAN-250KG	250	20	3,1 x 9,3	1	2,5 x 14,0	220	2,8	**0100002**

Type	A (mm)	B (mm)	C (mm)	D (mm)	E (mm)	F (mm)	G (mm)	H (mm)	I (mm)
HOISTMAN-150KG	220	103	46	57	102	14	24	11	9
HOISTMAN-250KG	220	103	46	57	102	14	24	11	9

Elephant PIH/H-100 hand chain hoist (cleanroom)



The Elephant PIH/H-100 cleanroom manual chain hoist is a robust hoist specifically designed for use in cleanroom environments.

Features
- Chrome-plated covers.
- Nickel-plated side plates.
- Upper and lower hooks nickel-plated.
- Load hooks bend gradually under overload and do not break abruptly.
- Nuts and washers made of stainless steel.
- Hand chain made of stainless steel.
- Load chain nickel-plated.

Standard delivery
- Standard lifting height: 3 m (distance between upper and lower hooks).
- Standard operating height: 2.5 m.

Options
- Other lifting and operating heights available on request.
- Load chain and load hooks in stainless steel.

0.5 - 2.0 t

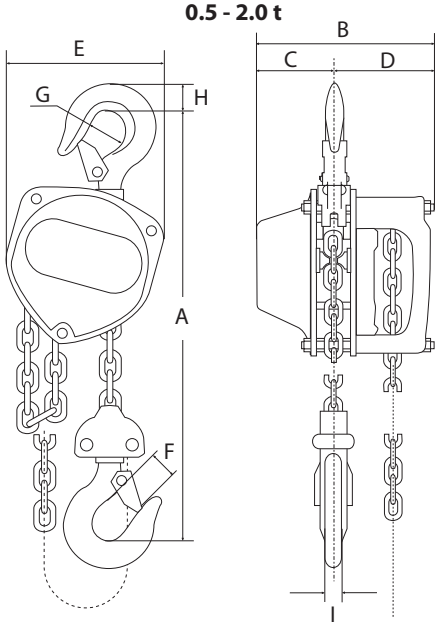

Type	WLL (kg)	Hand force max. (kg)	Load chain DxT (mm)	Number of falls	Hand chain DxT (mm)	Headroom (mm)	Weight (kg)	Article number
PIH/H100-500KG	500	22,0	5,0 x 15,0	1	5,0 x 23,7	277	9,0	**0100201**
PIH/H100-1000KG	1.000	25,5	6,3 x 19,1	1	5,0 x 23,7	303	11,5	**0100203**
PIH/H100-2000KG	2.000	34,0	8,0 x 24,0	1	5,0 x 23,7	379	21,0	**0100207**

Type	A (mm)	B (mm)	C (mm)	D (mm)	E (mm)	F (mm)	G (mm)	H (mm)	I (mm)
PIH/H100-500KG	277	155	65	90	140	26	36	17	13
PIH/H100-1000KG	303	160	69	91	160	30	43	22	16
PIH/H100-2000KG	379	183	83	100	215	38	53	29	22

Rema RIH SS hand chain hoist (food industry)



Made of stainless steel AISI 316/304

The Rema RIH manual chain hoist is a robust hoist made of stainless-steel material, with the exception of the brake components and gears, which are nickel-plated. Highly suitable for use in pharmaceutical, food, and petrochemical industries.

Features

- Suitable for highly corrosive environments or dust-free rooms – cleanroom applications.
- Maximum protection against corrosion.
- Load and hand chain in AISI 316 stainless steel.
- Covers in AISI 304 stainless steel.
- Hooks, plates, and load chain wheel in AISI 304 stainless steel.
- Electropolished surface.
- Gears and load-pressure brake components are nickel-plated.

Standard delivery

- Standard lifting height: 3 m (distance between upper and lower hooks).
- Standard operating height: 2.5 m.

Options

- Other lifting and operating heights available on request.
- Stainless-steel push trolley type 118 (see p. 18).

0.5 - 1.0 t

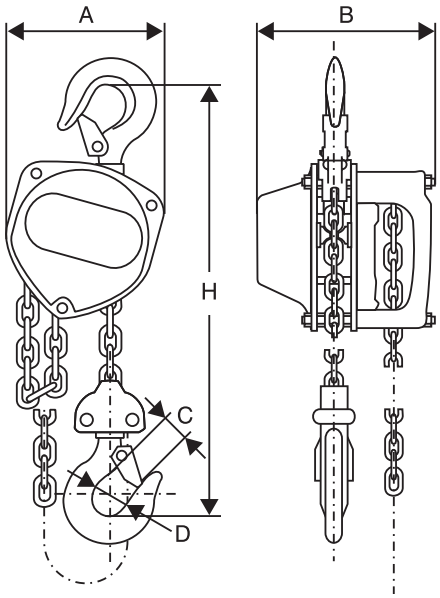

Type	WLL (kg)	Hand force max. (kg)	Load chain DxT (mm)	Number of falls	Hand chain DxT (mm)	Headroom (mm)	Weight (kg)	Article number
RIH-500	500	22,0	6,3 x 19,0	1	5,0 x 23,3	355	13,5	**0110001**
RIH-1000	1.000	25,5	7,9 x 23,0	1	5,0 x 23,3	425	22,0	**0110003**

Type	A (mm)	B (mm)	C (mm)	D (mm)	H (mm)
RIH-500	150	146,5	Ø 35	27	355
RIH-1000	193	164,6	Ø 43	32	425

Rema Select 200 OD hand chain hoist



The Rema Select 200 OD is equipped with overload protection, starting from the 500 kg model. A robust manual chain hoist that is designed for heavy and intensive use, where safety, ergonomics, and low operating effort are paramount.

Features

- Innovative overload protection ensures even safer operation of the hoist.
- The overload protection system allows the load to be lowered in a controlled manner in the event of overload.
- Equipped with a double brake pawl.
- Upper and lower hooks fitted with a robust latch set.
- Load hooks bend gradually under overload and do not break abruptly.
- Galvanized load chain (G8 according to EN 818-7).
- Supplied with galvanized hand chain.
- 250 kg model supplied without overload protection*.



Chain bucket

Standard delivery

- Standard lifting height: 3 m (distance between upper and lower hooks).
- Standard operating height: 2.5 m.
- Overload protection from 500 kg.

Options

- Other lifting and operating heights available on request.
- Chain bucket for load chain up to 10 m (from 500 kg up to 2,000 kg).
- Can be combined short with 211/212 trolley 0.5 / 1.0 / 2.0 t (see p. 17/53).



250 kg

0.25 - 2.0 t

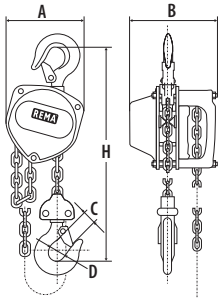

3.0 - 5.0 t

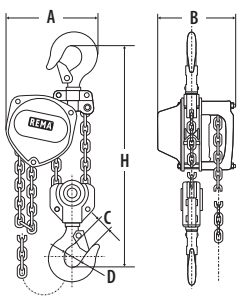

7.5 t

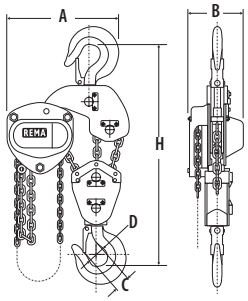

10.0 t

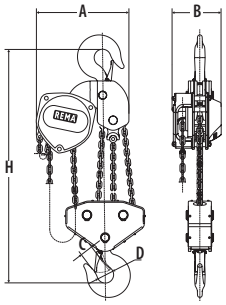

Type	WLL (kg)	Hand force max. (kg)	Load chain DxT (mm)	Number of falls	Hand chain DxT (mm)	Headroom (mm)	Weight (kg)	Article number
S200-250KG*	250	23,5	4,0 x 12,0	1	5,0 x 23,7	260	6,0	**0120000**
S200OD-500KG	500	24,9	5,0 x 15,0	1	5,0 x 23,7	280	9,0	**0120001**
S200OD-1000KG	1.000	28,4	6,3 x 19,0	1	5,0 x 23,7	330	12,0	**0120003**
S200OD-1500KG	1.500	30,8	7,1 x 21,0	1	5,0 x 23,7	360	16,0	**0120005**
S200OD-2000KG	2.000	34,3	8,0 x 24,0	1	5,0 x 23,7	385	20,0	**0120007**
S200OD-3000KG	3.000	34,3	7,1 x 21,0	2	5,0 x 23,7	510	24,0	**0120009**
S200OD-5000KG	5.000	37,2	9,0 x 27,0	2	5,0 x 23,7	615	37,0	**0120011**
S200OD-7500KG	7.500	36,8	9,0 x 27,0	3	5,0 x 23,7	690	62,0	**0120013**
S200OD-10000KG	10.000	40,0	9,0 x 27,0	4	5,0 x 23,7	820	104,6	**0120015**

Type	A (mm)	B (mm)	C (mm)	D (mm)	H (mm)
S200-250KG*	108	106	20	30	260
S200OD-500KG	130	128	22	34	280
S200OD-1000KG	150	142	26	39	330
S200OD-1500KG	170	158	29	42	360
S200OD-2000KG	185	175	35	49	385
S200OD-3000KG	220	158	37	50	510
S200OD-5000KG	255	183	43	60	615
S200OD-7500KG	430	189	47	67	690
S200OD-10000KG	360	183	47	65	820

Rema Select 200 hand chain hoist (higher capacities)



The Rema Select 200 is a robust manual chain hoist for higher capacities which is designed for heavy and intensive use, where safety, ergonomics, and low operating effort are paramount.

Features

- Equipped with a double pawl system.
- Upper and lower hooks fitted with a robust latch set.
- Load hooks deform gradually under overload and do not break abruptly.
- Galvanized load chain (G8 according to EN 818-7).
- Galvanized hand chain.

Standard delivery

- Standard lifting height: 3 m (distance between upper and lower hooks).
- Standard operating height: 2.5 m.
- Without overload protection.

Options

- Other lifting and operating heights available on request.

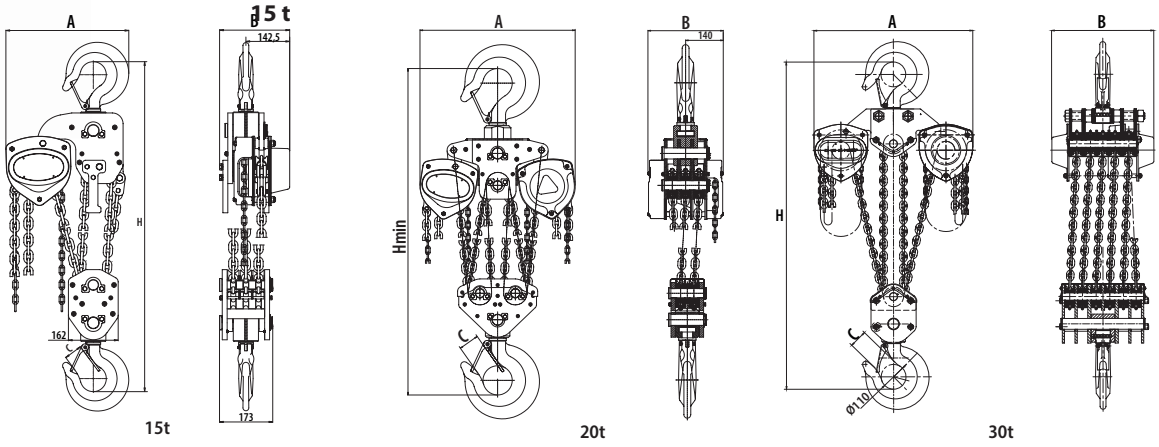

Type	WLL (kg)	Max. lifting height (m)	Hand force max. (kg)	Load chain DxT (mm)	Number of falls	Hand chain DxT (mm)	Headroom (mm)	Weight (kg)	Article number
S200-15000KG	15.000	16,0	40	9,0 x 27,0	6	5,0 x 23,7 (1x)	920	162,6	**0120017**
S200-20000KG	20.000	12,5	40	9,0 x 27,0	8	5,0 x 23,7 (2x)	980	200,0	**0120019**
S200-30000KG	30.000	8,0	40	10,0 x 28,0	12	5,0 x 23,7 (2x)	1450	340,0	**0120021**

Type	A (mm)	B (mm)	C (mm)	D (mm)	H (mm)
S200-15000KG	400	228	70	100	920
S200-20000KG	640	200	75	110	980
S200-30000KG	750	460	75	102	1150

Rema X-Line hand chain hoist



The Rema X-Line is one of the most popular and user-friendly manual chain hoists on the market; robust, ergonomic, versatile and designed for intensive use.

Features

- Low operating effort at full load.
- Increased operational safety through the double brake pawl.
- Load chain wheel made of wear-resistant alloy steel.
- Upper and lower hooks fitted with safety latches.
- Under overload, hooks deform gradually and do not break abruptly.
- Galvanized load chain (G8 according to EN 818-7).
- Galvanized hand chain.
- Steel housing.

Standard delivery

- Standard lifting height: 3 m (distance between upper and lower hooks).
- Standard operating height: 2.5 m.

Options

- Other lifting and operating heights available on request.
- Chain bucket for load chain up to 10 m lifting height, for hoists up to 2 t.



Chain bucket

0.25 - 2.0 t

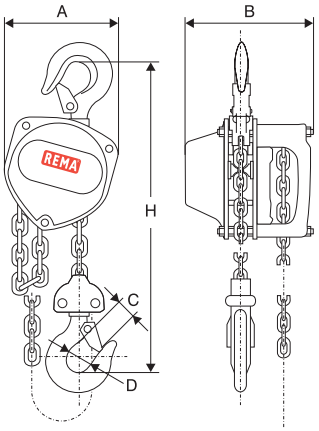

3.0 - 5.0 t

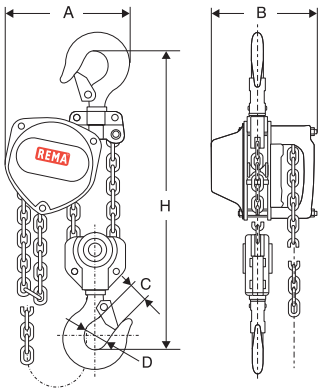

10 t

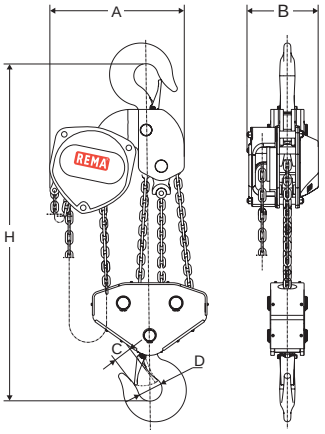

Type	WLL (kg)	Hand force max. (kg)	Load chain DxT (mm)	Number of falls	Hand chain DxT (mm)	Headroom (mm)	Weight (kg)	Article number
X-CH025/250KG	250	23,5	4,0 x 12,0	1	5,0 x 23,7	260	6,0	**0170000**
X-CH05/500KG	500	24,9	5,0 x 15,0	1	5,0 x 23,7	280	9,0	**0170001**
X-CH10/1000KG	1.000	28,4	6,3 x 19,0	1	5,0 x 23,7	330	12,0	**0170003**
X-CH15/1500KG	1.500	30,8	7,1 x 21,0	1	5,0 x 23,7	360	16,0	**0170005**
X-CH20/2000KG	2.000	34,3	8,0 x 24,0	1	5,0 x 23,7	385	20,0	**0170007**
X-CH30/3000KG	3.000	34,3	7,1 x 21,0	2	5,0 x 23,7	510	24,0	**0170009**
X-CH50/5000KG	5.000	37,2	9,0 x 27,0	2	5,0 x 23,7	615	37,0	**0170011**
X-CH100/10000KG	10.000	40,0	9,0 x 27,0	4	5,0 x 23,7	820	104,6	**0170015**

Type	A (mm)	B (mm)	C (mm)	D (mm)	H (mm)
X-CH025/250KG	108	106	20	30	260
X-CH05/500KG	130	128	22	34	280
X-CH10/1000KG	150	142	26	39	330
X-CH15/1500KG	170	158	29	42	360
X-CH20/2000KG	185	175	35	49	385
X-CH30/3000KG	220	158	37	50	510
X-CH50/5000KG	255	183	43	60	615
X-CH100/10000KG	360	183	47	65	820

Rema Blackline hand chain hoist (for theatre)



The Rema Blackline manual chain hoist is designed for theatre applications where safety, ergonomics, and low operating effort are essential. The body and hooks are finished in black for a discreet appearance on stage.

Features

- Low operating effort at full load.
- Increased operational safety through the double pawl system.
- Load chain wheel made of wear-resistant alloy steel.
- Upper and lower hooks fitted with safety latches.
- Under overload, hooks deform gradually and do not break abruptly.
- Galvanized load chain (G8 according to EN 818-7).
- Galvanized hand chain.
- Black finish for body and hooks, suitable for theatre use.

Standard delivery

- Standard lifting height: 10 or 15 m (distance between upper and lower hooks).
- Standard operating height: 2.5 m.

Options

- Other lifting and operating heights available on request.
- Chain bucket for load chain up to 10 m lifting height.



Chain bucket

0.25 / 0.5 t

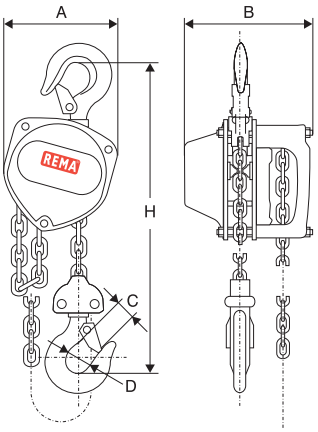

Type	WLL (kg)	Hand force max. (kg)	Load chain DxT (mm)	Number of falls	Hand chain DxT (mm)	Headroom (mm)	Weight (kg)	Article number
X-LINE/250KG/BLACK	250	23,5	4,0 x 12,0	1	5,0 x 23,7	280	6,0	**0171000**
X-LINE/500KG/BLACK	500	24,9	5,0 x 15,0	1	5,0 x 23,7	280	9,0	**0171001**

Type	A (mm)	B (mm)	C (mm)	D (mm)	H (mm)
X-LINE/250KG/BLACK	108	106	20	30	280
X-LINE/500KG/BLACK	130	128	22	34	280

Rema Select S20P hand chain/push trolley combination



Compact assembly of push trolley and Rema S200 OD manual chain hoist.

Features
- For low headroom applications.
- Push trolley execution.
- For hoist technical specifications see Select 200 OD manual chain hoist (p. 12).
- Trolley fitted with wheel-fracture guards and anti-lift device.
- Suitable for various beam profiles.

Standard delivery
- Supplied with push trolley.
- Standard lifting height: 3 m (distance between upper and lower hooks).
- Standard operating height: 2.5 m.

Options
- Other lifting and operating heights available on request.
- Chain bucket for load chain up to 10 m lifting height, for hoists up to 2 t.



Chain bucket

0.5 - 2.0 t

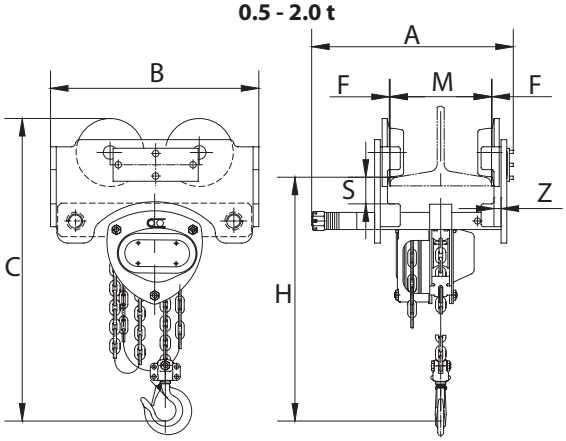

3.0 - 5.0 t

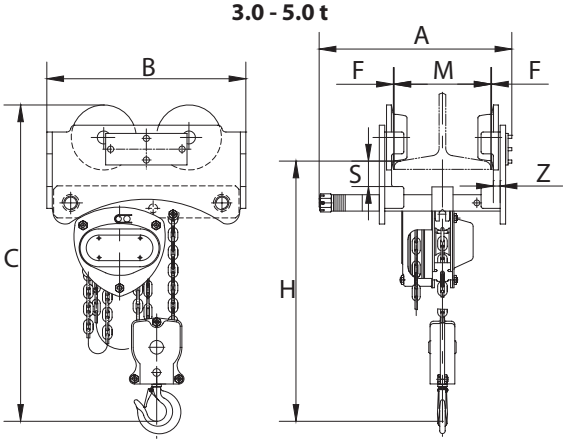

Type	WLL (kg)	Number of falls	Flange width (mm)	Minimum radius (mm)	Load chain DxT (mm)	Hand chain DxT (mm)	Trolley wheel diameter (mm)	Weight (kg)	Article number
S20P/200OD-0.5	500	1	50-203	800	5,0 x 15,0	5,0 x 23,7	55	18,0	**0930001**
S20P/200OD-1.0	1.000	1	64-305	900	6,3 x 19,1	5,0 x 23,7	68	26,0	**0930003**
S20P/200OD-1.5	1.500	1	88-305	1000	7,1 x 21,0	5,0 x 23,7	80	38,0	**0930005**
S20P/200OD-2.0	2.000	1	88-305	1000	8,0 x 24,0	5,0 x 23,7	80	48,0	**0930007**
S20P/200OD-3.0	3.000	2	100-305	1200	7,1 x 21,0	5,0 x 23,7	100	66,0	**0930009**
S20P/200OD-5.0	5.000	2	114-305	1300	9,0 x 27,0	5,0 x 23,7	110	91,0	**0930011**

Type	A (mm)	B (mm)	C min (mm)	F (mm)	H min (mm)	M (mm)	S (mm)	Z (mm)
S20P/200OD-0.5	265	258	310,5	1,5~3,0	243,5	50-203	30,0	9
S20P/200OD-1.0	385	292	420,0	1,5~3,0	340,0	64-305	37,0	8
S20P/200OD-1.5	396	360	460,0	1,5~3,0	380,0	88-305	39,0	10
S20P/200OD-2.0	396	360	500,0	1,5~3,0	405,0	88-305	38,0	10
S20P/200OD-3.0	407	430	590,0	1,5~3,0	475,0	100-305	42,0	12
S20P/200OD-5.0	420	420	725,0	1,5~3,0	610,0	114-305	41,5	16

Rema Select S20G hand chain hoist/geared trolley combination



Compact assembly of hand-geared travelling trolley and Rema S200 OD manual chain hoist.

Features
- For low headroom applications.
- Geared trolley execution.
- For hoist technical specifications see Select 200 OD manual chain hoist (p. 12).
- Trolley fitted with wheel-fracture guards and anti-tilt device.
- Suitable for various beam profiles.

Standard delivery
- Supplied with geared trolley.
- Standard lifting height: 3 m (distance between underside of beam and bottom hook).
- Standard operating height: 2.5 m.

Options
- Other lifting and operating heights available on request.
- Chain bucket for load chain up to 10 m lifting height, for hoists up to 2 t.



Chain bucket

0.5 - 2.0 t

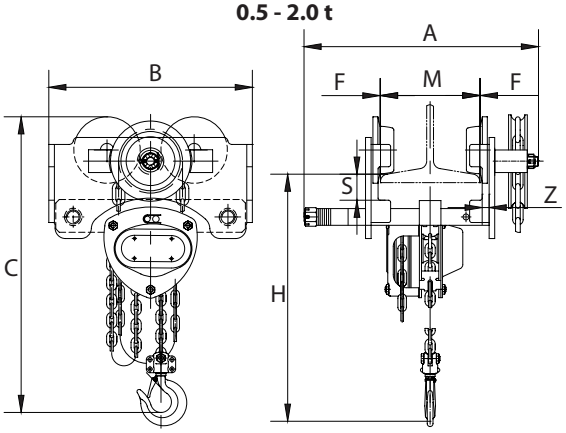

3.0 - 5.0 t

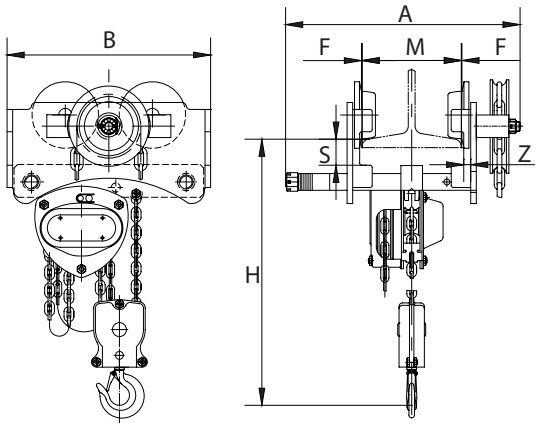

Type	WLL (kg)	Number of falls	Flange width (mm)	Minimum radius (mm)	Load chain DxT (mm)	Hand chain DxT (mm)	Trolley wheel diameter (mm)	Weight (kg)	Article number
S20G/200OD-0.5	500	1	50-203	800	5,0 x 15,0	5,0 x 23,7	55	19,0	**0931001**
S20G/200OD-1.0	1.000	1	64-305	900	6,3 x 19,1	5,0 x 23,7	68	27,0	**0931003**
S20G/200OD-1.5	1.500	1	88-305	1000	7,1 x 21,0	5,0 x 23,7	80	39,0	**0931005**
S20G/200OD-2.0	2.000	1	88-305	1000	8,0 x 24,0	5,0 x 23,7	80	49,0	**0931007**
S20G/200OD-3.0	3.000	2	100-305	1200	7,1 x 21,0	5,0 x 23,7	100	67,0	**0931009**
S20G/200OD-5.0	5.000	2	114-305	1300	9,0 x 27,0	5,0 x 23,7	110	92,0	**0931011**

Type	A (mm)	B (mm)	C min (mm)	F (mm)	H min (mm)	M (mm)	S (mm)	Z (mm)
S20G/200OD-0.5	322	258	310,5	1,5~3,0	243,5	50-203	30	9
S20G/200OD-1.0	435	292	420,0	1,5~3,0	340	64-305	37	8
S20G/200OD-1.5	433	360	460,0	1,5~3,0	380	74-305	39	10
S20G/200OD-2.0	446	360	500,0	1,5~3,0	405	88-305	38	10
S20G/200OD-3.0	459	430	590,0	1,5~3,0	475	100-305	42	12
S20G/200OD-5.0	474	447	725,0	1,5~3,0	610	114-305	41,5	16

Rema AL360 aluminium hand chain hoist



The REMA lightweight aluminium hand chain hoist offers maximum flexibility and safety. Thanks to its 360° rotatable design, you can lift and position loads from virtually any angle, even in confined spaces. Its low weight reduces physical strain on the user, which directly contributes to better ergonomics. Together with its well-thought-out, safe design, you can work quickly, accurately and comfortably.

Features

- Lightweight: Aluminium housing
- 360° rotatable: Full rotation hand chain
- Ergonomic: Operation from almost any angle
- Load pressure brake: Holds loads at any desired height
- Double pawl system
- Compact: Compact design with low installation height
- High-quality European load chain: Complies with EN818-7
- Available in capacities 250 and 500 kg

Standard delivery

- 3 m lifting height. (max. distance between upper and lower hooks).
- 2,5 m operating height.

Option

- Available in any other hoisting and operational heights.

Type	WLL (kg)	Number of falls	Lifting height (m)	Construction height (mm)	Load chain DxT (mm)	Hand chain DxT (mm)	Hand force max (kg)	Weight (kg)	Article number
AL360/250KG/3M	250	1	3	240	3,2 x 9,0	2,5 x 14,0	15	2,8	**0030001-3**
AL360/500KG/3M	500	1	3	270	4,3 x 12,0	3,5 x 20,0	19	4,8	**0030003-3**

Rema KBT 200 OD hand chain hoist with geared trolley (extremely short design)



Extremely compact assembly of geared trolley and manual chain hoist combination.
Only available in combination with the Rema Select 200 OD manual chain hoist.

Features

- This trolley is only available in combination with the Select 200 OD manual chain hoist.
- Extremely low headroom applications (135–235 mm).
- Suitable for beams with both straight and sloped flanges.
- Maintenance-free ball bearings.
- Wheel-fracture guards for extra safety.
- Hand-geared travel.
- For hoist technical specifications see Select 200 OD manual chain hoist (p. 12).

Standard delivery

- Standard lifting height: 3 m (distance between upper and lower hooks).
- Standard operating height: 2.5 m.

Options

- Other lifting and operating heights available on request.

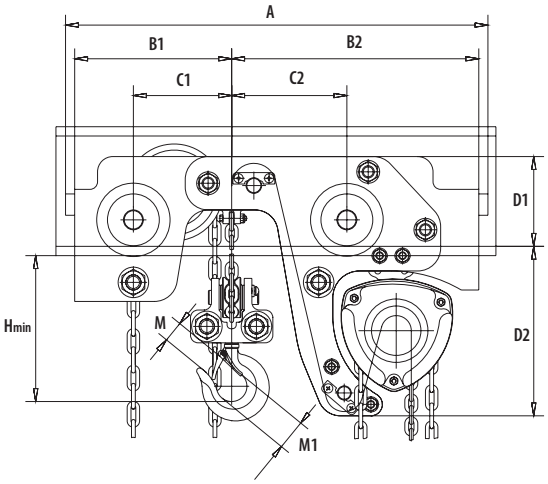

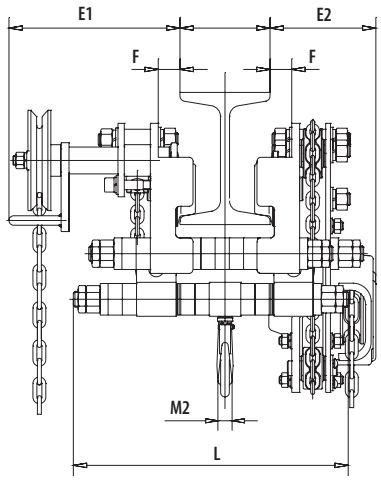

Type	WLL (kg)	Number of falls	Flange width (mm)	Minimum radius (mm)	Load chain DxT (mm)	Hand chain DxT (mm)	Weight (kg)	Article number
KBT200OD-1.0	1.000	2	74-150	2500	5,0 x 15,0	5,0 x 23,7	69,0	**0923001**
KBT200OD-2.0	2.000	2	82-156	4000	6,3 x 19,1	5,0 x 23,7	118,0	**0923003**
KBT200OD-3.2	3.200	2	103-223	4500	8,0 x 24,0	5,0 x 23,7	181,0	**0923005**
KBT200OD-5.0	5.000	4	119-215	6000	8,0 x 24,0	5,0 x 23,7	293,0	**0923007**
KBT200OD-6.3	6.300	4	119-215	6000	8,0 x 24,0	5,0 x 23,7	296,0	**0923009**

Type	A (mm)	B1 (mm)	B2 (mm)	C1 (mm)	C2 (mm)	D1 (mm)	D2 (mm)	E1 (mm)	E2 (mm)	F (mm)	H min. (mm)	L (mm)	M1 (mm)	M2 (mm)
KBT200OD-1.0	554	206	234	129	151	117	223	217	134	27,5	135	348	40	18
KBT200OD-2.0	684	254	406	149	211	165	265	240	152	36,5	160	392	50	24
KBT200OD-3.2	765	279	461	169	236	165	325	240	173	44,0	190	499	55	28
KBT200OD-5.0	873	336	524	201	279	184	327	259	180	39,0	235	512	65	37
KBT200OD-6.3	873	336	524	201	279	184	327	259	180	39,0	235	512	65	37

Selection guide - lever hoists



Elephant YA

No. 1 among lever hoists – top quality and excellent ease of operation.

Features

Designed for very intensive use in the offshore and heavy-industry sectors.

1.000 kg - 9.000 kg

Page 24



Elephant Y-II 250KG

Same as YA, but even more compact and weighing only 2 kg at 1.5 m lifting height.

Features

Due to its extremely low self-weight, ideal for any service kit and/or maintenance van.

250 kg

Page 25



Elephant YA (Rema YAM)

Same as Y-II 250 kg, but available in 500 kg version with gear-wheel transmission.

Features

With a very low weight of 2.8 kg, ideal for any service kit and/or maintenance van.

500 kg

Page 26



Elephant YAS

Same as YA, but equipped with shipyard-type load hooks.

Features

For pulling in all directions in shipbuilding and industrial applications.

1.600kg - 3.200 kg

Page 27



Rema S2-0D

Equipped with an innovative overload-protection system that automatically lowers the load in case of overload.

Features

Safe operation – both hoist and structure are protected against unintended overload.

250 kg - 9.000 kg

Page 28



Rema X-LINE

Manufactured according to the same quality standards as the Select 2-0D, but without overload protection.

Features

Equivalent to the Select 2-0D - however, supplied without overload protection.

250 kg - 9.000 kg

Page 29



Elephant YA lever hoist



The Elephant YA lever hoist is an extremely robust hoist designed for lifting, pulling, tensioning, and lashing in all directions. With a single simple action, the hoist can be set to freewheel mode (in unloaded condition).

Features

- Lightweight, compact dimensions, and minimal operating force at full load.
- Swivelling top and bottom hooks fitted with safety latches.
- Load hooks deform gradually under overload and do not break abruptly.
- Load-pressure brake holds the load at any desired height.
- Safe operation ensured by patented double pawl system.
- Freewheel function possible in unloaded condition.
- Lever fitted with a rubber anti-slip grip.
- Galvanized load chain (G10 VH according to EN 818-7).
- Quick freewheel function by a single simple action.

Standard delivery

- Standard lifting height: 1.5 m (distance between upper and lower hooks).

Options

- Other lifting heights available on request.

0.5 - 2.0 t

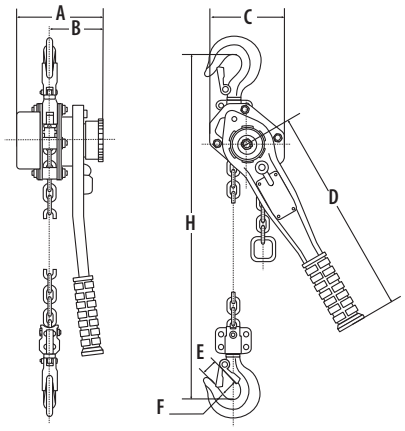

6.3 t

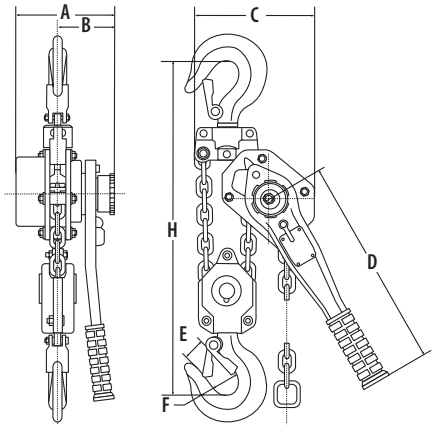

9.0 t

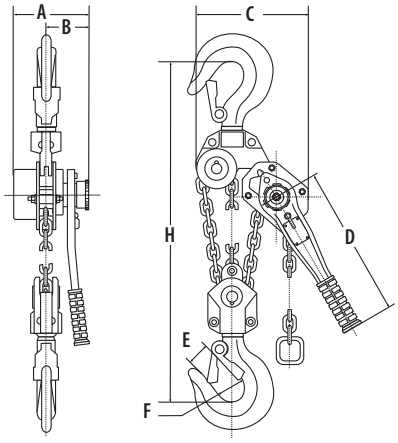

Type	WLL (kg)	Hand force max. (kg)	Load chain DxT (mm)	Number of falls	Headroom (mm)	Weight (kg)	Article number
YA-1000KG	1.000	37	5,6 x 17,1	1	312	6,2	**0208003**
YA-1600KG	1.600	37	7,1 x 21,0	1	352	9,2	**0208005**
YA-3200KG	3.200	37	9,0 x 27,0	1	420	15,5	**0208007**
YA-6300KG	6.300	38	9,0 x 27,0	2	564	26,5	**0208009**
YA-9000KG	9.000	39	9,0 x 27,0	3	589	42,0	**0208011**

Type	A (mm)	B (mm)	C (mm)	D (mm)	E (mm)	F (mm)	H (mm)
YA-1000KG	144,0	91	122	268	28	43	312
YA-1600KG	162,0	99	136	310	29	43	352
YA-3200KG	186,5	104	180	310	36	53	420
YA-6300KG	186,5	104	235	310	47	70	564
YA-9000KG	186,5	104	300	310	73	85	689

Elephant Y-II 250 kg lever hoist (Rema YA)



Only 2 kg
1.5 m lifting height

The Elephant Y-II 250 kg lever hoist is a compact version of the proven Elephant YA lever hoist. It offers the same robust design and reliable performance, but in a significantly smaller and lighter format. Ideal for mobile use, service kits and maintenance applications where minimum weight and size are essential. With a single simple action, the hoist can be set to freewheel mode (in unloaded condition).

Features

- Very lightweight and compact dimensions.
- Swivelling top and bottom hooks fitted with safety latches.
- Load hooks deform gradually under overload and do not break abruptly.
- Load-pressure brake holds the load securely at any desired height.
- Freewheel function possible in unloaded condition.
- Lever fitted with a rubber anti-slip grip.
- Galvanized load chain (VH according to EN 818-7).
- Quick freewheel function by a single simple action.

Standard delivery

- Standard lifting height: 1.5 m (distance between upper and lower hooks).

Options

- Other lifting heights available on request.

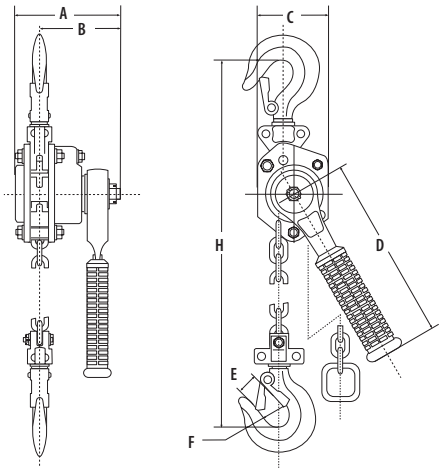

Type	WLL (kg)	Hand force max. (kg)	Load chain DxT (mm)	Number of falls	Headroom (mm)	Weight (kg)	Article number
Y-II-250KG	250	30	4,0 x 12,0	1	235	2,0	**0208000**

Type	A (mm)	B (mm)	C (mm)	D (mm)	E (mm)	F (mm)	H (mm)
Y-II-250KG	91	70	60	155	19	31	235

Elephant YA lever hoist (Rema YAM)



Only 2 kg
1.5 m lifting height

The Elephant YA lever hoist is compact and is lightweight. The required hand force on the short lever (180 mm) Remains low thanks to the favourable gear ratio. The most ideal tool for assembly work such as lifting, pulling, and tensioning.

Features

- Very lightweight, compact design.
- Hooks fitted with safety latches.
- Load-pressure brake holds the load securely at any desired height.
- Freewheel function possible in unloaded condition with a single action.
- Lever with rubber anti-slip grip.
- Load hooks deform gradually under overload and do not break abruptly.
- Galvanized load chain (G10 according to EN 818-7).
- Minimum load is 10 kg.

Standard delivery

- - Standard lifting height: 1.5 m (distance between upper and lower hooks).

Options

- Other lifting heights available on request.

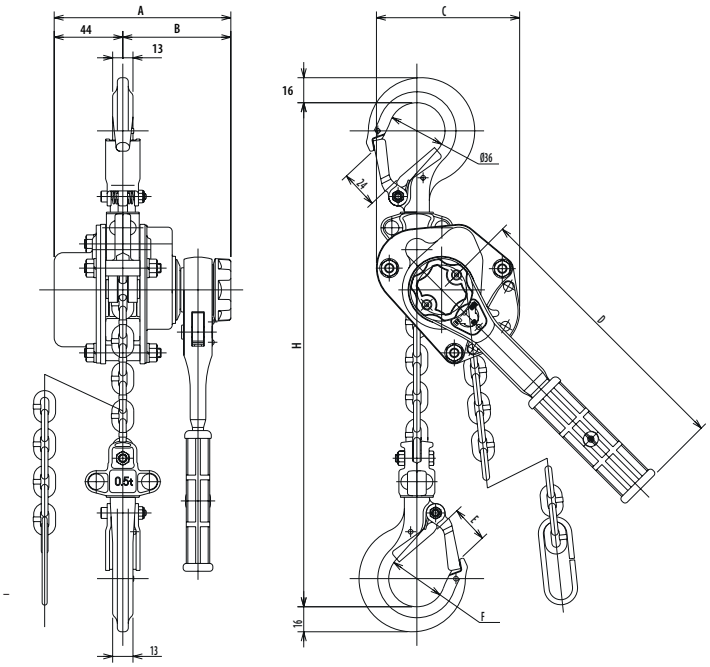



Type	WLL (kg)	Hand force max. (kg)	Load chain DxT (mm)	Number of falls	Headroom (mm)	Weight (kg)	Article number
YA-500KG	500	35	4,3 x 12,0	1	240	2,8	**0208002**

Type	A (mm)	B (mm)	C (mm)	D (mm)	E (mm)	F (mm)	H (mm)
YA-500KG	113	69	92	180	24	36	240

Elephant YAS lever hoist (pulling only)



Not for lifting

Equipped with shipyard hooks.

The Elephant YAS lever hoist is an extremely robust hoist designed specifically for pulling in all directions. With a single simple action, the hoist can be set to freewheel mode.

Features

- Lightweight, compact dimensions, and minimal operating force at full load.
- Swivelling top and bottom hooks without safety latches.
- Load hooks deform gradually under overload and do not break abruptly.
- Load-pressure brake holds the load securely at any desired position.
- Safe operation ensured by patented double pawl system.
- Freewheel function possible in unloaded condition.
- Lever fitted with a rubber anti-slip grip.
- Galvanized load chain (G10).
- Quick freewheel function by a single simple action.
- Equipped with shipyard hooks, suitable for pulling only.
- Designed for pulling steel sections together.

Standard delivery

- Standard lifting height: 1.5 m (distance between upper and lower hooks).

Options

- Other lifting heights available on request.

1.6 - 3.2 t

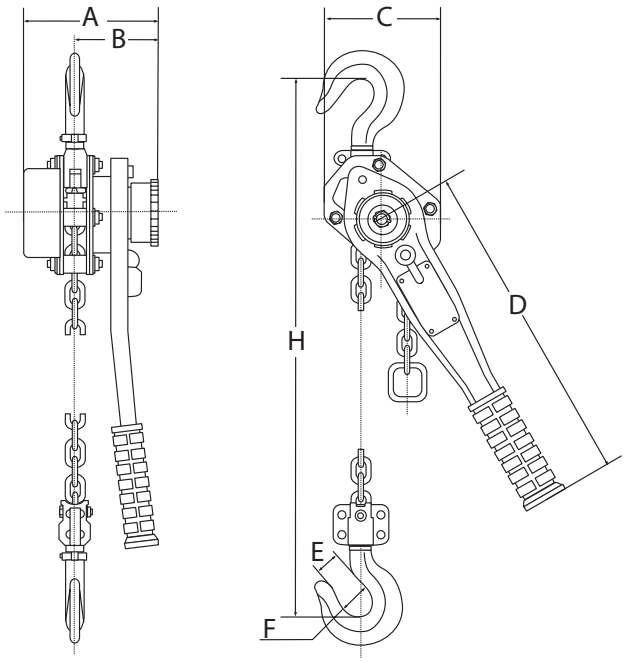

Type	WLL (kg)	Hand force max. (kg)	Load chain DxT (mm)	Number of falls	Headroom (mm)	Weight (kg)	Article number
YAS-1600KG-SW	1.600	30	7,1 x 21,0	1	352	9,2	**0208006**
YAS-3200KG-SW	3.200	37	9,0 x 27,0	1	420	15,5	**0208008**

Type	A (mm)	B (mm)	C (mm)	D (mm)	E (mm)	F (mm)	H (mm)
YAS-1600KG-SW	162,0	99	136	310	34	45	352
YAS-3200KG-SW	186,5	104	180	310	47	57	420

Rema Select 2 OD lever hoist



The Rema Select 2 OD lever hoist is equipped with a standard built-in overload protection, except for the 250 kg model*, ensuring safe operation when lifting, pulling, tensioning, or lashing.

Features

- Innovative overload protection ensures safer operation of the hoist.
- The overload protection system allows the load to be lowered in a controlled manner in case of overload.
- Overload protection prevents dangerous overloading of the hoist and structure.
- Low operating force at full load thanks to bearings.
- Equipped with a double pawl system.
- Load chain wheel manufactured from precision, wear-resistant alloy steel.
- Freewheel function possible in unloaded condition.
- Swivelling top and bottom hooks fitted with robust safety latches.
- Load hooks deform gradually under overload and do not break abruptly.
- Galvanized load chain (G8 according to EN 818-7).
- Lever fitted with Rema rubber anti-slip grip.
- *250 kg model supplied without overload protection.

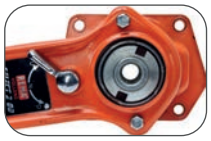





Standard delivery

- Standard lifting height: 1.5 m (distance between upper and lower hooks).

Options

- Other lifting heights available on request.

0.25 t

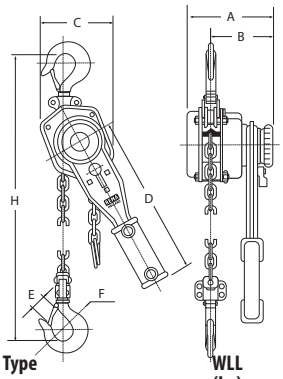

0.5 - 3.0 t

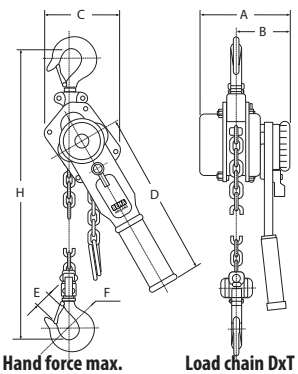

6.3 t

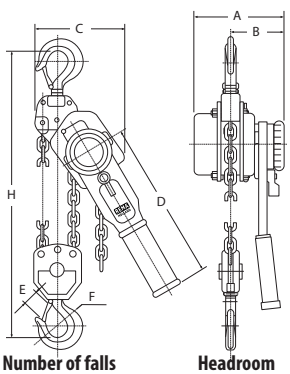

9.0 t

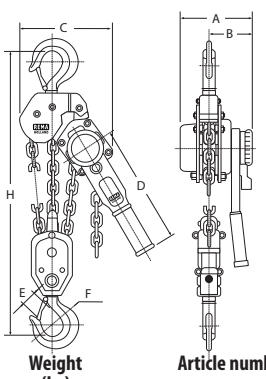

Type	WLL (kg)	Hand force max. (kg)	Load chain DxT (mm)	Number of falls	Headroom (mm)	Weight (kg)	Article number
S2-250KG*	250	28,2	4,0 x 12,0	1	235	2,5	**0220000**
S2OD-500KG	500	24,8	5,0 x 15,0	1	310	5,5	**0220001**
S2OD-800KG	800	26,5	5,6 x 17,0	1	340	6,5	**0220003**
S2OD-1600KG	1.600	29,5	7,1 x 21,0	1	400	10,2	**0220005**
S2OD-3200KG	3.200	33,5	10,0 x 28,0	1	520	22,0	**0220007**
S2OD-6300KG	6.300	37,0	10,0 x 28,0	2	640	34,0	**0220009**
S2OD-9000KG	9.000	42,0	10,0 x 28,0	3	730	45,0	**0220011**

Type	A (mm)	B (mm)	C (mm)	D (mm)	E (mm)	F (mm)	H (mm)
S2-250KG*	100	70	86	163	20	31	235
S2OD-500KG	150	90	118	253	22	32	310
S2OD-800KG	158	98	132	273	26	36	340
S2OD-1600KG	185	111	145	378	29	43	400
S2OD-3200KG	212	124	198	418	37	50	520
S2OD-6300KG	212	124	230	418	43	53	640
S2OD-9000KG	212	124	338	418	44	67	730

Rema X-Line lever hoist



The Rema X-Line lever hoist is designed for safe and reliable operation when lifting, pulling, tensioning, or lashing.

Features

- Low operating effort at full load.
- Increased operational safety with double pawl system.
- Freewheel function in unloaded condition.
- Load chain wheel made of wear-resistant alloy steel.
- Upper and lower hooks fitted with safety latches.
- Under overload, hooks deform gradually and do not break abruptly.
- Galvanized load chain (G8 according to EN 818-7).
- Steel housing.

Standard delivery

- Standard lifting height: 1.5 m (distance between upper and lower hooks).

Options

- Other lifting heights available on request.

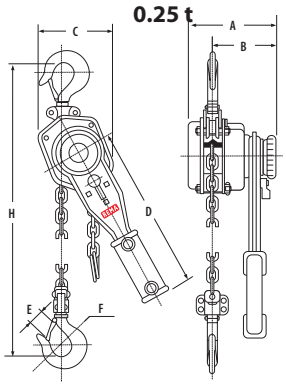

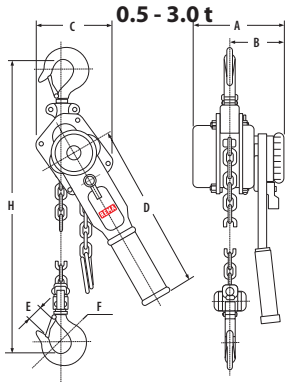

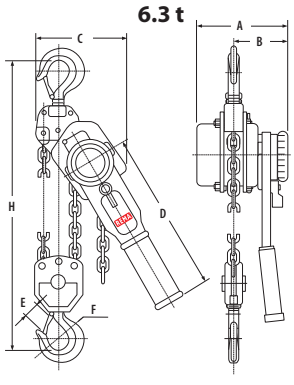

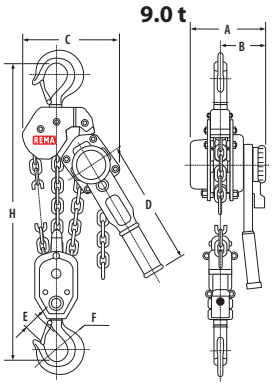

Type	WLL (kg)	Hand force max. (kg)	Load chain DxT (mm)	Number of falls	Headroom (mm)	Weight (kg)	Article number
X-LH025/250KG	250	28,2	4,0 x 12,0	1	235	2,5	**0270000**
X-LH050/500KG	500	24,8	5,0 x 15,0	1	310	5,5	**0270001**
X-LH080/800KG	800	26,5	5,6 x 17,0	1	340	6,5	**0270003**
X-LH16/1600KG	1.600	29,5	7,1 x 21,0	1	400	10,2	**0270005**
X-LH32/3200KG	3.200	33,5	10,0 x 28,0	1	520	22,0	**0270007**
X-LH63/6300KG	6.300	37,0	10,0 x 28,0	2	640	34,0	**0270009**
X-LH90/9000KG	9.000	42,0	10,0 x 28,0	3	730	45,0	**0270011**

Type	A (mm)	B (mm)	C (mm)	D (mm)	E (mm)	F (mm)	H (mm)
X-LH025/250KG	100	70	86	163	20	31	235
X-LH050/500KG	150	90	118	253	22	32	310
X-LH080/800KG	158	98	132	273	26	36	340
X-LH16/1600KG	185	111	145	378	29	43	400
X-LH32/3200KG	212	124	198	418	37	50	520
X-LH63/6300KG	212	124	230	418	43	53	640
X-LH90/9000KG	212	124	338	418	44	67	730

Selection guide - electric chain hoists



Elephant FAH / FBH | 400 V

Popular, robust hoist equipped with limit switches, plug-in connections, and 24 V control.

The FAH version features single lifting speed, while the FBH offers two lifting speeds.

Features

High duty cycle and fast lifting speed ensure reliable operation and long service life.

500 kg - 3.000 kg

Page 28, 29



Elephant ALPHA | 230 / 400 V

Very compact electric hoist available in two voltage versions.

Features

Ideal for installation and maintenance work.

Compact dimensions make it suitable for every service vehicle.

Extremely low self-weight.

150 kg - 500 kg

Page 30, 33



Elephant BETA | 230 V

Extremely compact aluminium electric hoist with very low weight — only 7.5 kg with a 3 m lifting height.

Currently the lightest available electric hoist on the market.

Features

Ideal for installation and maintenance work.

Compact design and low weight make it perfect for mobile use.

125 kg - 200 kg

Page 32



Rema X-BL Battery-powered

The X-BL is a battery-powered chain hoist with limit switches.

Features

Brushless DC electric chain hoist

Lion battery 18 V 4.0 Ah

Thermal overload protection

250 kg - 500 kg

Page 34



Rema SR 400 V / 230 V

Both voltage options are equipped with 24 V control and limit switches.

Features

Suitable for a wide range of industrial applications thanks to various lifting speeds, duty cycles, and voltage options.

125 kg - 6.300 kg

Page 35 - 38



Rema LK-13 | 400 V / 24 V

Heavy-duty electric hoist designed for demanding industrial use, equipped with 24 V control and limit switches for top and bottom hook positions.

Features

Ideal for industrial solutions requiring high lifting heights and heavy loads.

Built for high duty cycles and long service life.

5.000 kg - 12.500 kg

Page 39

Checklist for electric hoist selection

Use this checklist when specifying or requesting an electric chain hoist:

- ☐ Hoist type (ALC | FAH | FBH | Rema SR | Rema LK-13)
- ☐ Lifting capacity
- ☐ Lifting height
- ☐ Operating height
- ☐ Lifting speed (1 or 2 speeds)
- ☐ Duty cycle / application type (intermittent or continuous)
- ☐ Power supply (230 V or 400 V)
- ☐ Control voltage (direct or 24 V)
- ☐ Suspension type (hook, eye, or trolley mount)
- ☐ With or without trolley
- ☐ Trolley type (push, geared, or electric)
- ☐ Track height
- ☐ Beam flange width and type
- ☐ Integrated hoist/trolley combination
- ☐ Power cable type (round or flat)
- ☐ Cable length (for power or control)

Elephant FAH 400 V electric chain hoist (1 speed)



The Elephant 400 V electric hoist is extremely durable and equipped with a robust sheet-steel housing. It is very popular due to the complete design with limit switches, 24 V control voltage, and plug connections. The high duty cycle and high lifting speed ensure reliable operation and a long service life.

Features

- Slip clutch for overload protection.
- Brake holds the load securely at any desired height.
- Limit switches for highest and lowest hook position.
- 24 V control voltage operation.
- Power and control cables equipped with plug connections.
- Phase reversal protection against incorrect motor rotation.
- Galvanized load chain, Class DAT (G8 according to EN 818/7).
- Operating voltage 400 VAC / 50 Hz.
- Load hooks deform gradually under overload and do not break abruptly.
- Single speed lifting and lowering.

Options

- Other lifting and operating heights available on request.
- Larger chain container (> 3 m).
- Radio remote control.
- Push / electric trolley.
- 440 V / 60 Hz available on request.

Standard delivery

- Standard lifting height: 3 m (distance between upper and lower hooks).
- 1.8 m control cable with strain relief.
- Limit switches for highest and lowest hook position.
- Pendant push-button control 24 V.
- 4 m power cable.
- Plastic chain bucket for 3 m lifting height.

0.5 t

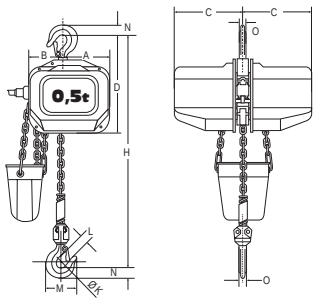

1.0 t

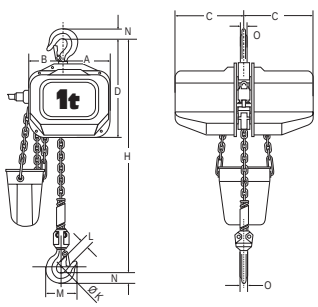

2.0 t

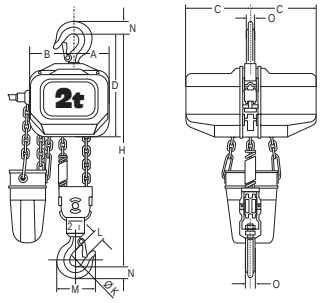

3.0 t

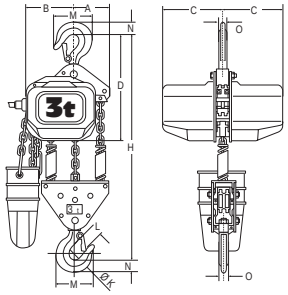

Type	WLL (kg)	Lifting speed (m/min)	Duty cycle 120 cycles/h (%)	Load chain DxT (mm)	Number of falls	Max. lifting height (m)	Headroom (mm)	Power output (kW)	Weight (kg)	Article number
FAH05/500	500	7,0	40	6,3 x 19,1	1	30	480	0.9	43,0	**0515001**
FAH10/1000	1.000	7,6	40	7,1 x 21,0	1	30	570	1.6	56,0	**0515003**
FAH20/2000	2.000	3,8	40	7,1 x 21,0	2	15	710	1.6	64,0	**0515005**
FAH30/3000	3.000	2,5	40	7,1 x 21,0	3	10	810	1.6	83,0	**0515007**

Type	A (mm)	B (mm)	C (mm)	D (mm)	H (mm)	K (mm)	L (mm)	M (mm)	N (mm)	O (mm)	Insulation class	Operating voltage (V)	Protection class IP	FEM 9.511 hoist motor
FAH05/500	161	124	224	311	480	36	26	86	24	19	E	400	IP54	1Am
FAH10/1000	170	128	239	348	570	43	33	107	31	23	E	400	IP54	1Am
FAH20/2000	133	165	239	372	710	53	42	144	44	30	E	400	IP54	1Am
FAH30/3000	148	208	239	427	810	60	50	165	49	35	E	400	IP54	1Am

Elephant FBH 400 V electric chain hoist (2 speeds)



The Elephant 400 V electric hoist is extremely durable and equipped with a robust sheet-steel housing. It is very popular due to the complete design with limit switches, 24 V control voltage, and plug connections. The high duty cycle and high lifting speed ensure reliable operation and long service life.

Features

- Slip clutch for overload protection.
- Brake holds the load securely at any desired height.
- Limit switches for highest and lowest hook position.
- 24 V control voltage operation.
- Power and control cables equipped with plug connections.
- Phase reversal protection against incorrect motor rotation.
- Galvanized load chain, Class DAT (G8 according to EN 818/7).
- Operating voltage 400 VAC / 50 Hz.
- Load hooks deform gradually under overload and do not break abruptly.
- Two lifting and lowering speeds.

Options

- Other lifting and operating heights available on request.
- Larger chain container (> 3 m).
- Radio remote control.
- Push / electric trolley.
- 440 V / 60 Hz available on request.

Standard delivery

- Standard lifting height: 3 m (distance between upper and lower hooks).
- 1.8 m control cable with strain relief.
- Limit switches for highest and lowest hook position.
- Pendant push-button control 24 V.
- 4 m power cable.
- Plastic chain bucket for 3 m lifting height.

0.5 t

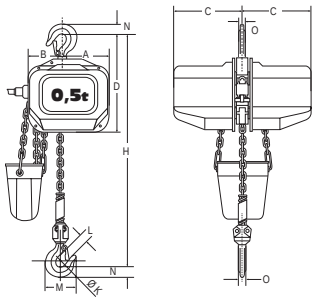

1.0 t

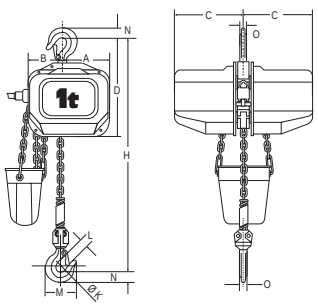

2.0 t

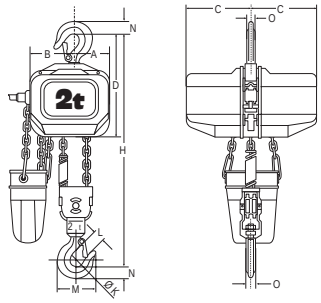

3.0 t

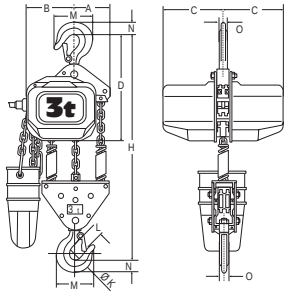

Type	WLL (kg)	Lifting speed (m/min)	Duty cycle 120 cycles/h (%)	Load chain DxT (mm)	Number of falls	Max. lifting height (m)	Headroom (mm)	Power output (kW)	Weight (kg)	Article number
FBH05/500	500	7,0/1,8	40/20	6,3 x 19,1	1	30	480	0.9/0.25	44,0	**0512013**
FBH10/1000	1.000	7,6/1,9	40/20	7,1 x 21,0	1	30	570	1.6/0.4	57,0	**0512015**
FBH20/2000	2.000	3,8/1,0	40/20	7,1 x 21,0	2	15	710	1.6/0.4	65,0	**0512017**
FBH30/3000	3.000	2,5/0,6	40/20	7,1 x 21,0	3	10	810	1.6/0.4	84,0	**0512019**

Type	A (mm)	B (mm)	C (mm)	D (mm)	H (mm)	K (mm)	L (mm)	M (mm)	N (mm)	O (mm)	Insulation class	Operating voltage (V)	Protection class IP	FEM 9.511 hoist motor
FBH05/500	161	124	224	311	480	36	26	86	24	19	E	400	IP54	1Am
FBH10/1000	170	128	239	348	570	43	33	107	31	23	E	400	IP54	1Am
FBH20/2000	133	165	239	372	710	53	42	144	44	30	E	400	IP54	1Am
FBH30/3000	148	208	239	427	810	60	50	165	49	35	E	400	IP54	1Am

Elephant Alpha 400 V electric chain hoist



The Elephant Alpha 400 V electric hoist is compact and lightweight (aluminium housing). Wide applicability due to its high duty cycle in combination with high lifting speed.

Features
- Slip clutch for overload protection.
- Load-pressure brake holds the load securely at any desired height.
- Load hooks deform gradually under overload and do not break abruptly.
- Galvanized load chain, Class DAT (G8 according to EN 818-7).

Technical specifications
- Insulation class: E.
- FEM 9.511 motor: 2m.
- Operating voltage: 400 VAC.
- Protection class: IP54.
- Control voltage: 24 V.

Options
- Other lifting and operating heights available on request.
- Larger chain container (> 3 m).
- Push trolley.

Standard delivery
- Standard lifting height: 3 m (distance between upper and lower hooks).
- 1.8 m control cable with strain relief.
- Pendant push-button control 400/24 V.
- 4 m power cable.
- Plastic chain bucket for 3 m lifting height.

150 - 250 kg

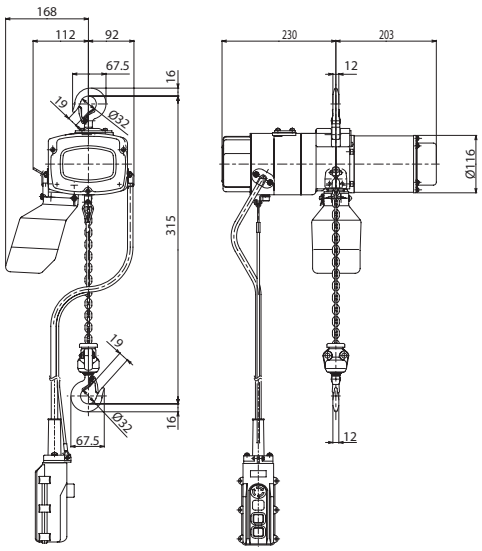

500 kg

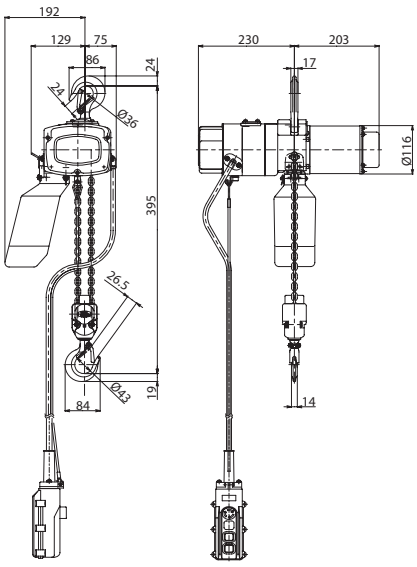

Type	WLL (kg)	Lifting speed (m/min)	Duty cycle 120 cycles/h (%)	Load chain DxT (mm)	Number of falls	Max. lifting height (m)	Headroom (mm)	Power output (kW)	Weight (kg)	Article number
ALC015/150	150	9,0	40	4,0 x 12,0	1	30	325	0.55	18,0	**0514001**
ALC025/250	250	9,0	40	4,0 x 12,0	1	30	325	0.55	18,0	**0514003**
ALC05/500	500	4,5	40	4,0 x 12,0	2	15	415	0.55	22,0	**0514005**

Elephant ALCMS 400 V electric chain hoist/trolley combination



The Elephant ALCMS 400 V Electric hoist is compact and assembled with an electric trolley. Wide applicability due to its high duty cycle in combination with high lifting speed.

Features
- Slip clutch for overload protection.
- Load-pressure brake holds the load securely at any desired height.
- Load hooks deform gradually under overload and do not break abruptly.
- Galvanized load chain, Class DAT (G8 according to EN 818-7).
- Operation via a single pendant push-button control.

Technical specifications electric hoist
- Insulation class: E.
- FEM 9.511 motor: 2 m.
- Operating voltage: 400 VAC – 50 Hz.
- Protection class: IP54.
- Control voltage: 24 V.

Technical specifications trolley
- Trolley travel speed: 10 m/min.
- Trolley flange width: 75 – 125 mm.
- Protection class: IP54.
- Motor power: 0.4 kW.
- Operating voltage: 400 V – 50 Hz.
- Control voltage: 24 V.

Standard delivery
- Standard lifting height: 3 m (distance between upper and lower hooks).
- 1.8 m control cable with strain relief.
- Pendant push-button control 400/24 V.
- 4 m power cable.
- Plastic chain bucket for 3 m lifting height.

Options
- Other lifting and operating heights available on request.
- Larger chain container (> 3 m).

Type	WLL (kg)	Lifting speed (m/min)	Duty cycle 120 cycles/h (%)	Load chain DxT (mm)	Number of falls	Max. lifting height (m)	Headroom (mm)	Power output (kW)	Weight (kg)	Article number
ALCMS25/250	250	9,0	40	4,0 x 12,0	1	30	407	0.55	40,0	**0514103**
ALCMS50/500	500	4,5	40	4,0 x 12,0	2	15	415	0.55	43,0	**0514105**

Elephant Beta 230 V electric chain hoist



Only 7.5 kg
3 m lifting height

The Elephant Beta 230 V electric hoist is very lightweight, compact, and ideal for light assembly work.

Features

- Equipped with slip clutch.
- Load-pressure brake holds the load securely at any desired height.
- Very lightweight, only 7.5 kg.
- Extremely compact design.
- Load hooks deform gradually under overload and do not break abruptly.
- G10 load chain according to EN 818-7.

Technical specifications

- Insulation class: B.
- FEM 9.511 motor: 1Am.
- Operating voltage: 230 VAC.
- Protection class: IP54.
- Control voltage: 230 V direct control.

Standard delivery

- Standard lifting height: 3 m (distance between upper and lower hooks).
- 1.8 m control cable with strain relief and pendant push-button, direct control.
- 3 m power cable.
- Without trolley.

Options

- Other lifting and operating heights available on request.
- Push trolley.

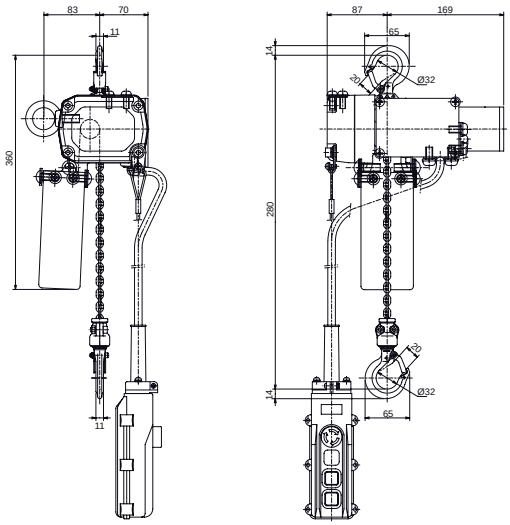

Type	WLL (kg)	Lifting speed (m/min)	Duty cycle 150 cycles/h (%)	Load chain DxT (mm)	Number of falls	Max. lifting height (m)	Headroom (mm)	Power output (kW)	Weight (kg)	Article number
BETA-H/125KG	125	6,5	150 (25)	3,0 x 9,0	1	10	280	0.18	7,5	**0511001**
BETA-H/200KG	200	3,8	150 (25)	3,0 x 9,0	1	10	280	0.18	7,5	**0511003**

Elephant Alpha 230 V electric chain hoist



The Elephant Alpha 230 V electric chain hoist is compact and very lightweight (aluminium housing). Widely applicable due to its high duty cycle in combination with high lifting speed.

Features
- Slip clutch for overload protection.
- Load-pressure brake holds the load securely at any desired height.
- Load hooks deform gradually under overload and do not break abruptly.
- Galvanized load chain, Class DAT (G8) according to EN 818/7.

Technical specifications
- Insulation class: B.
- FEM 9.511 motor: 1Am.
- Operating voltage: 230 VAC.
- Protection class: IP54.
- Control voltage: 230 V direct control.

Standard delivery
- Standard lifting height: 3 m (distance between upper and lower hooks).
- 1.8 m control cable with strain relief and pendant push-button, direct control.
- 4 m power cable.
- Plastic chain bucket up to 6 m chain, from 6 m chain supplied with plastic bag.
- Without trolley.



ALHV



ALHVDH

Type description
- **ALH** = 1 speed.
- **ALHB** = 2 speeds.
- **ALHV** = Variable speed.
- **ALHVDH** = Variable speed, operated at bottom hook.

Options
- Other lifting and operating heights available on request.
- Larger chain container (> 3 m).
- Radio remote control (ALH and ALHB).
- Push trolley.

ALH / ALHV 250 kg

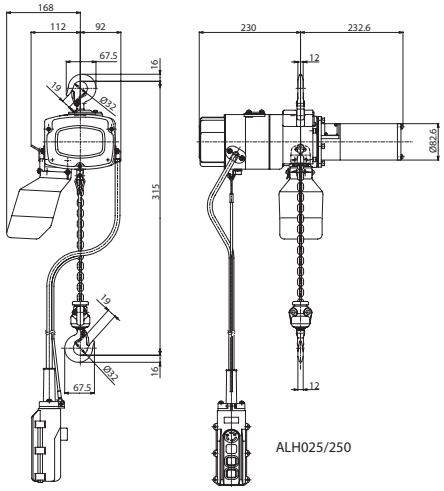

ALH / ALHV 500 kg

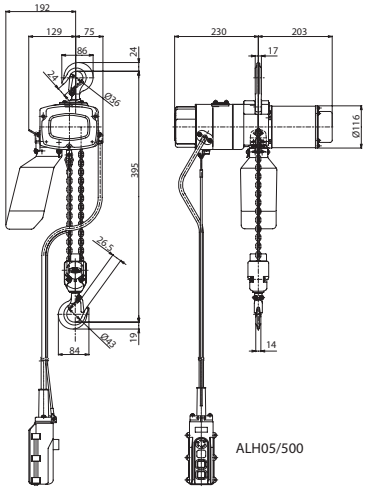

ALHVDH 250 kg

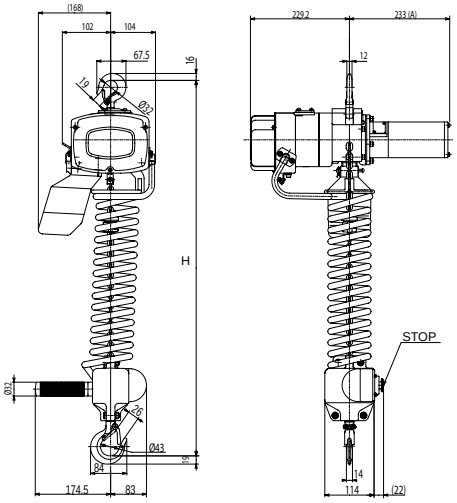

Type	WLL (kg)	Lifting speed (m/min)	Duty cycle 120 cycles/h (%)	Load chain DxT (mm)	Number of falls	Max. lifting height (m)	Headroom (mm)	Power output (kW)	Weight (kg)	Article number
ALH025/250	250	10,0	30	4,0 x 12,0	1	30,0	315	0.6	17,0	**0513009**
ALH05/500	500	5,0	30	4,0 x 12,0	2	15,0	415	0.6	20,0	**0513011**
ALHB025/250	250	10,0/4,0	30	4,0 x 12,0	1	30,0	315	0.6	17,0	**0513019**
ALHB05/500	500	5,0/2,0	30	4,0 x 12,0	2	15,0	415	0.6	20,0	**0513021**
ALHV025/250	250	1,0~10,0	30	4,0 x 12,0	1	30,0	315	0.6	17,0	**0513105**
ALHV05/500	500	0,5~5,0	30	4,0 x 12,0	2	15,0	415	0.6	20,0	**0513107**
ALHVDH/250	250	0,9~10,0	25	4,0 x 12,0	1	2,5	673	0.6	22,0	**0513205**

Rema X-BL Battery-powered electric chain hoist



The REMA X-BL battery-powered chain hoist offers the flexibility of a manual chain hoist, the power of an electric hoist, and the mobility of a cordless tool. The battery-powered chain hoist is surprisingly versatile; it has its own power source, is lightweight, compact yet professionally powerful, and can be used in a wide range of industries where mobility and flexibility are crucial.
In short: wherever mobile lifting is required, the REMA X-BL battery-powered chain hoist is your ideal partner.

Features

- Brake that holds the load at any desired height.
- Limit switches for highest and lowest hook positions.
- Power supply 18/36 V.
- Galvanized load chain, Class DAT (Grade 8).
- In case of overload, the hooks will gradually bend and do not suddenly break.
- 1 speed.
- Brushless DC electric chain hoist
- Lion battery 18 V 4.0 Ah
- Thermal overload protection

Standard delivery

- 3 m lifting height (maximum distance between top and bottom hook).
- 1.8 m control cable.
- Limit switches highest and lowest hook position.
- Push-button 18/36 V control unit.
- Plastic chain bucket for max. 6 m lifting height.
- Incl. battery and battery charger

Options

- Lifting height up to 6 m available on request
- Push trolley
- Hard carrying case
- CAS adapter

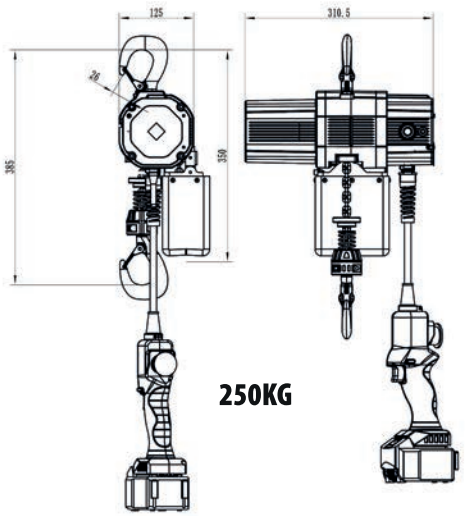

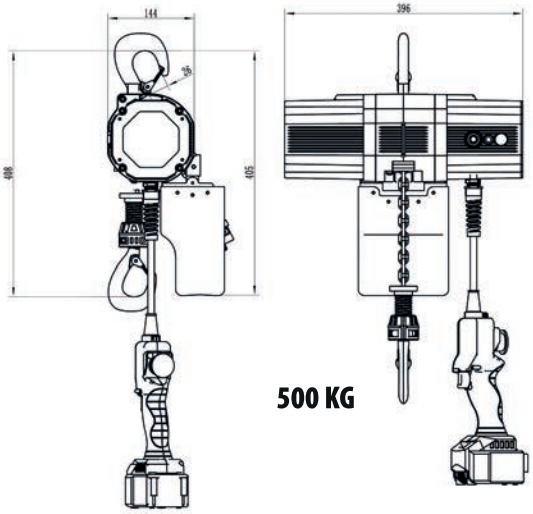

Type	WLL (kg)	Size (mm)	Duty cycle 150 cycles/h (%)	Load chain DxT (mm)	Number of falls	Max. lifting height (m)	Headroom (mm)	Power output (kW)	Weight (kg)	Article number
X-BL/250KG/3M	250	310 x 110 x 115	40	4,0 x 12,0	1	3	335	0.32	12,0	**0040001-3**
X-BL/500KG/3M	500	400 x 130 x 135	40	5,0 x 15,0	1	3	345	0.85	15,5	**0040002-3**

Rema SR 400 V electric chain hoist (24 V control)



The Rema SR 400 V electric hoist is a highly advanced and modern electric hoist, with its main advantages being the very high duty cycle and modular construction.

Features

- 400 V, 3 Ph, 50 Hz, 24 V control voltage, IP55, insulation class F.
- Equipped with limit switches for highest and lowest hook position.
- Attractive design for low headroom applications.
- Very high duty cycle thanks to air-cooled motor.
- User- and maintenance-friendly due to modular construction.
- Patented brake system holds the load securely at any desired height.
- Slip clutch for overload protection.
- Modular design allows the enclosed drive, brake, and drive motor to be replaced independently of each other.
- Easy and quick conversion from single-fall to double-fall hoist (except SR111/56-2t).*
- Load chain Class DAT (G8 according to EN 818-7).

Standard delivery

- Standard lifting height: 3 m (distance between upper and lower hooks).
- 1.8 m control cable with strain relief.
- Pendant push-button control 24 V.
- Including limit switches.
- 1 m power cable.
- Chain bucket.
- Thermal protection.

Options

- Other lifting and operating heights available on request.
- Larger chain bucket.
- Radio remote control.
- Push trolley (HFN, see p. 49) or electric trolley (EFS, see p. 63).

Type	WLL (kg)	Lifting speed (m/min)	Number of falls	Load chain DxT (mm)	ISO / FEM	Duty cycle (ED%-cycles/h)	Hoist motor (kW)	Standard chain bucket lifting height (m)	(A) Larger chain bucket lifting height (m)	Trolley type	Weight (kg)	Article number
SR030/62-125KG-24V	125	8,0	1	5,2 x 15,0	M7/4m	60/360	0.55	8	30	500	22,0	**0851000**
SR031/53-125KG-24V	125	8,0/2,0	1	5,2 x 15,0	M7/4m	60/40/360	0.32/0.08	8	30	500	24,0	**0851001**
SR031/51-250KG-24V	250	8,0/2,0	1	5,2 x 15,0	M6/3m	50/25/300	0.32/0.08	8	30	500	24,0	**0851003**
SR030/64-250KG-24V	250	8,0	1	5,2 x 15,0	M6/3m	50/300	0.55	8	30	500	22,0	**0851006**
SR031/51-500KG-24V	500	4,0/1,0	2	5,2 x 15,0	M6/3m	50/25/300	0.32/0.08	4	15	500	28,0	**0851009**
SR030/52-500KG-24V	500	8,0	1	5,2 x 15,0	M3/1Bm	40/240	0.7	8	25	2000	39,0	**0861013**
SR071/54-500KG-24V	500	8,0/2,0	1	7,2 x 21,0	M5/2m	60/25/240	0.9/0.2	5	17	2000	45,0	**0861016**
SR030/52-1000KG-24V	1.000	4,0	2	5,2 x 15,0	M3/1Bm	40/240	0.7	4	12	2000	27,0	**0861015**
SR071/55-1000KG-24V	1.000	6,0/1,5	1	7,2 x 21,0	M5/2m	60/25/240	1.1/0.2	5	17	2000	40,0	**0861029**
SR070/55-1000KG-24V	1.000	6,0	1	7,2 x 21,0	M5/2m	40/240	1.1	5	17	2000	39,0	**0851033**
SR091/52-1000KG-24V	1.000	10,0/2,5	1	9,0 x 27,0	M6/3m	60/25/240	1.8/0,45	10	18	3200	80,0	**0861040**
SR091/55 1600KG-24V	1.600	8,0/2,0	1	9,0 x 27,0	M5/2m	60/25/240	3/0.75	10	18	3200	88,0	**0861044**
SR071/55-2000KG-24V	2.000	3,0/0,75	2	7,2 x 21,0	M5/2m	60/25/240	1.1/0.2	4	8	2000	53,0	**0861031**
SR070/53-2000KG-24V	2.000	5,0	2	7,2 x 21,0	M4/1Am	60/240	1.7	4	8	2000	50,0	**0861035**
SR091/52-2000KG-24V	2.000	5,0/1,25	2	9,0 x 27,0	M6/3m	60/25/240	1.8/0,45	5	9	3200	90,0	**0861042**
SR111/56 2000KG-24V*	2.000	8,0/2,0	1	11,3 x 31,0	M5/2m	60/25/240	3/0,75	6	12	3200	90,0	**0861048***
SR111/52-2500KG-24V	2.500	10,0/2,5	1	11,3 x 31,0	M5/2m	40/25/150	4.4/1.1	6	12	6300	108,0	**0861053**
SR091/55-3200KG-24V	3.200	4,0/1,0	2	9,0 x 27,0	M6/3m	60/25/240	3/0.75	5	9	3200	98,0	**0861046**
SR111/54-3200KG-24V	3.200	8,0/2,0	1	11,3 x 31,0	M4/1Am	25/25/150	4.4/1.1	6	12	6300	108,0	**0861057**
SR111/52-5000KG-24V	5.000	5,0/1,25	2	11,3 x 31,0	M5/2m	40/25/150	4.4/1.1	3	6	6300	127,0	**0861055**
SR111/54-6300KG-24V	6.300	4,0/1,0	2	11,3 x 31,0	M4/1Am	25/25/150	4.4/1.1	3	6	6300	127,0	**0861059**

Type	A (mm)	B (mm)	C (mm)	D (mm)	E (mm)	F (mm)	G (mm)	G2 (mm)	H (mm)	H2 (mm)	K (mm)	L (mm)	M (mm)	N (mm)	I (mm)	J (mm)
SR030/62-125KG-24V	221	192	220	-	-	220	437	409	597	566	19	33	19	24	15	20
SR031/53-125KG-24V	221	192	220	314	198	220	437	409	597	566	19	33	19	24	15	20
SR031/51-250KG-24V	221	192	220	314	198	220	437	409	597	566	19	33	19	24	15	20
SR030/64-250KG-24V	221	192	220	-	-	220	437	409	597	566	19	33	19	24	15	20
SR031/51-500KG-24V	221	192	220	314	198	220	485	454	597	566	24	33	19	24	19	22
SR030/52-500KG-24V	221	192	220	-	-	220	437	409	597	566	19	35	19	24	15	20
SR071/54-500KG-24V	277	232	274	314	191	274	500	460	607	566	24	34	24	31	19	22
SR030/52-1000KG-24V	221	192	220	-	-	220	485	463	597	622	24	35	19	24	19	22
SR071/55-1000KG-24V	277	232	274	314	191	274	500	460	662	577	24	34	24	24	19	22
SR070/55-1000KG-24V	277	232	274	-	-	274	500	460	662	622	24	34	24	31	19	22
SR091/52 1000KG-24V	376	283	359	387	125	359	615	548	761	692	31	35	32	40	24	28
SR091/55 1600KG-24V	376	283	359	387	125	359	615	548	761	692	31	35	32	40	24	28
SR071/55-2000KG-24V	277	232	274	314	190	274	601	561	662	622	31	34	24	31	24	28
SR070/53-2000KG-24V	277	232	274	-	-	274	601	761	662	622	31	34	24	31	24	28
SR091/52-2000KG-24V	376	283	359	387	125	359	723	655	791	692	40	35	32	40	24	28
SR111/56 2000KG-24V*	380	291	410	387	125	410	732	561	805	749	40	34	45	58	32	28
SR111/52-2500KG-24V	380	291	410	410	161	410	732	678	761	749	40	36	45	58	32	30
SR091/55-3200KG-24V	376	283	359	387	125	359	723	655	805	692	40	35	32	40	32	30
SR111/54-3200KG-24V	380	291	410	410	161	410	732	678	805	749	40	36	45	58	32	30
SR111/52-5000KG-24V	380	291	410	410	161	410	861	807	805	749	58	36	45	58	45	42
SR111/54-6300KG-24V	380	291	410	410	161	410	861	807	805	749	58	36	45	58	45	42

Mounting and trolley configurations

- **Hook suspension** – for stationary use or fixed installation.
- **Push trolley version** – manual travel for short beam distances (HFN, see p. 49).
- **Electric trolley version** – motorized travel for longer runways (EFS, see p. 63).
- **Low-headroom version** – integrated trolley design with minimal height for confined spaces (see p. 39).

Electric trolley versions feature:

- Two lifting speeds for smooth and accurate positioning.
- Limit switches for hoist and trolley end positions.
- 24 V control voltage for maximum safety.

Important:
Always specify the correct flange width.

Hook suspension

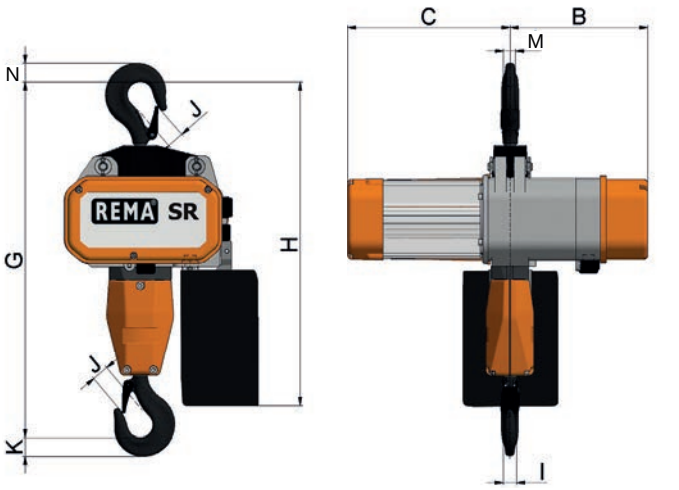

Version with push trolley (HFN, see p. 49)

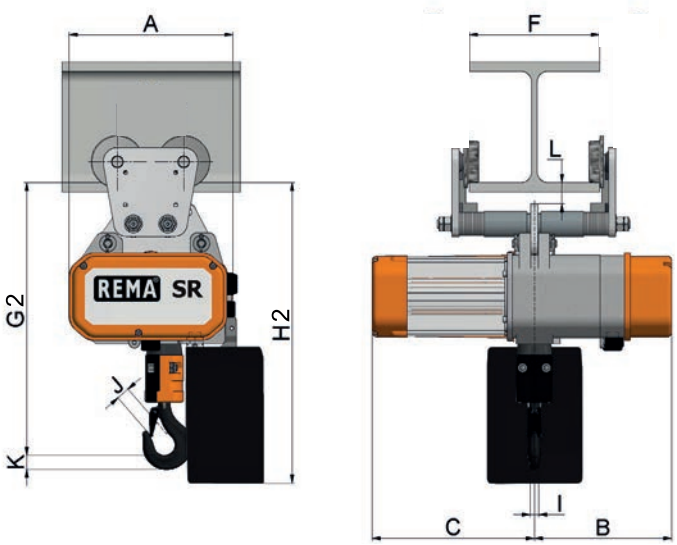

Version with electric trolley (EFS, see p. 63)

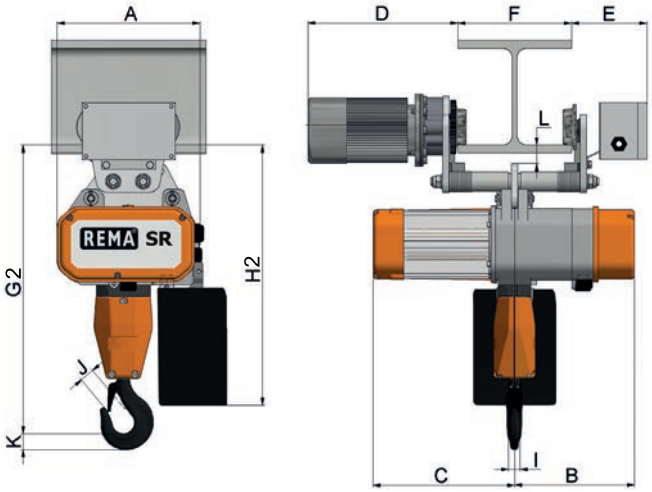

Rema SR electric chain hoist with push trolley (HFN)

Compact and practical manual trolley system

The Rema SR hoist combined with the push trolley (HFN) offers a reliable solution for short beam distances and occasional horizontal movement.

The manually operated trolley runs smoothly and ensures precise positioning in compact installations.

Key benefits

- Simple, maintenance-free design for light-duty horizontal travel.
- Perfect for workshops, assembly areas, and maintenance stations.
- Compatible with all Rema SR hoists (up to 6.3 t).
- Easy adjustment to suit various flange widths.



See p. 49

Rema SR electric chain hoist with electric trolley (EFS)

Motorized travel for smooth and efficient operation

The Rema SR hoist combined with the electric trolley (EFS) provides motorized horizontal movement for longer runways and frequent use.

It ensures smooth travel, accurate load handling and comfortable operation in industrial environments.

Key benefits

- Electric trolley with dual travel speeds for precise control.
- Robust steel frame and adjustable flange width for universal fit.
- Smooth acceleration and braking for optimal load stability.
- Ideal for production lines, logistics, and repetitive lifting tasks.



See p. 63

Adjustment range for Rema push trolleys (HF..) and electric trolleys (EF..)

Trolley selection & beam compatibility

The Rema SR hoist mounts on either a push trolley (HF.. see p. 49) for manual travel or an electric trolley (EF.. see p. 63) for motorised travel along the beam. Both types run on standard I- and W-beams using flat and tapered steel wheels.

The adjustment settings N, S1 and S2 allow the trolley to be configured to your specific beam flange width. Always specify the correct flange width in mm when ordering.

WLL trolley (kg)	Trolley types: HF.. / EF..			Wheel
	N (mm)	S1 (mm)	S2 (mm)	Ø (mm)
500	50-106	110-200	210-300	70
2000	66-135	137-215	220-300	70
3200	82-155	137-215	220-300	103
6300	90-155	160-236	230-310	122

Rema SR electric chain hoist with integrated trolley (low headroom design)

Compact low headroom design for maximum lifting height

The Rema SR electric chain hoist with integrated electric trolley combines high lifting performance with a space-saving design, making it the perfect solution for environments where headroom is limited.

Its modular construction, advanced control system, and durable components ensure maximum reliability in industrial and maintenance applications.

Available in capacities from 1 and 2 tonnes, the SR series offers precise, efficient, and safe load handling in all industrial environments.

Thanks to its compact construction, the low-headroom version reduces overall height to just 310–370 mm, depending on capacity, allowing the maximum lifting height to be fully utilized.



Rema SR 230 V electric chain hoist (24 V control)



The Rema SR 230 V electric hoist is a highly advanced and modern hoist, with its main advantages being the very high duty cycle and modular design. It is powered by 230 V single-phase supply with a minimum conductor cross-section of 2.5 mm^2. During installation, the power cable should be kept as short as possible to avoid voltage loss.

Important:
Always specify the correct flange width.

Features

- 230 V, single-phase, 50 Hz, equipped with 24 V control voltage.
- Equipped with limit switches for highest and lowest hook positions.
- Special motors with high thermal capacity.
- High duty cycle enabling higher lifting heights.
- Maximum safety through patented slip clutch/brake combination.
- Patented brake system holds the load securely at any desired height.
- Slip clutch protects the hoist against overload.
- Suitable for stationary suspension or in combination with HFN push trolley (p. 49).
- Galvanized load chain, Class DAT (G8) according to EN 818-7.

Standard delivery

- Standard lifting height: 3 m (distance between upper and lower hooks).
- 1.8 m control cable with strain relief.
- Pendant push-button control 24 V.
- Equipped with limit switches for highest and lowest hook positions.
- 1 m power cable.
- Chain bucket.

Options

- Other lifting and operating heights available on request.
- Larger chain bucket.
- Radio remote control.
- HFN push trolley (p. 49).

Hook suspension

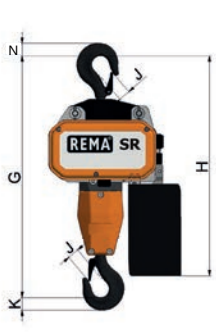

Push trolley

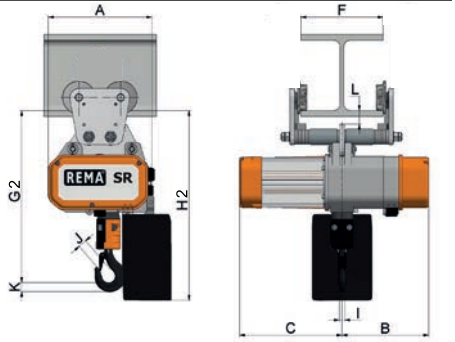

Type	WLL (kg)	Lifting speed (m/min)	Number of falls	Load chain DxT (mm)	ISO / FEM	Duty cycle (ED%-cycles/h)	Hoist motor (kW)	Standard chain bucket lifting height (m)	(A) Larger chain bucket lifting height (m)	Trolley type	Weight (kg)	Article number
SR030/01-250KG-24V	250	8	1	5,2 x 15,0	M3/1Bm	25/150	0.35	8	30	HFN500	21,0	**0801202**
SR030/01-500KG-24V	500	4	2	5,2 x 15,0	M3/1Bm	25/150	0.35	4	15	HFN500	25,0	**0801204**
SR050/02-500KG-24V	500	8	1	5,2 x 15,0	M3/1Bm	25/150	0.70	8	25	HFN2000	31,0	**0801207**
SR050/02-1000KG-24V	1.000	4	2	5,2 x 15,0	M3/1Bm	25/150	0.70	4	12	HFN2000	35,0	**0801209**
SR070/01-1000KG-24V	1.000	6	1	7,2 x 21,0	M3/1Bm	25/150	1.10	5	17	HFN2000	36,0	**0801215**
SR070/01-2000KG-24V	2.000	3	2	7,2 x 21,0	M3/1Bm	25/150	1.10	4	8	HFN2000	42,0	**0801217**

Type	A (mm)	B (mm)	C (mm)	G (mm)	G2 (mm)	H (mm)	H2 (mm)	K (mm)	L (mm)	M (mm)	N (mm)	I (mm)	J (mm)
SR030/01-250KG-24V	221	192	220	437	406	597	566	19	33	19	24	15	20
SR030/01-500KG-24V	221	192	220	485	454	597	566	24	33	19	24	19	22
SR050/02-500KG-24V	277	232	274	465	451	552	535	19	34	19	24	15	20
SR050/02-1000KG-24V	277	232	274	513	499	552	535	24	34	19	24	19	22
SR070/01-1000KG-24V	277	232	274	500	460	622	622	24	34	24	31	19	22
SR070/01-2000KG-24V	277	232	274	601	561	622	622	24	34	24	31	24	28

Rema LK 400 V heavy-duty electric chain hoist (24 V control)



Over the past decades, the Rema LK electric hoist has proven to be a reliable and safe hoist under the most diverse conditions.



Features

- Very high lifting capacities for up to 25 t.
- Patented brake system holds the load securely at any desired height.
- Slip clutch for overload protection of the hoist.
- Upper and lower hook limit switches.
- High duty cycle combined with high lifting speeds.
- Galvanized load chain, Class DAT (G8) according to EN 818-7.

Standard delivery

- Standard lifting height: 3 m (distance between suspension shackle and bottom hook).
- 1.8 m control cable with strain relief.
- Pendant push-button control 24 V.
- Equipped with upper and lower limit switches.
- 1 m power cable.
- Chain bucket.
- Suspension plate.
- Trolley not included.

Options

- Other lifting and operating heights available on request.
- Larger chain bucket.
- Alternative voltages and frequencies.
- Radio remote control.
- Hook suspension.
- Electric trolley.
- Capacities above 12.5 t – 25 t available on request.

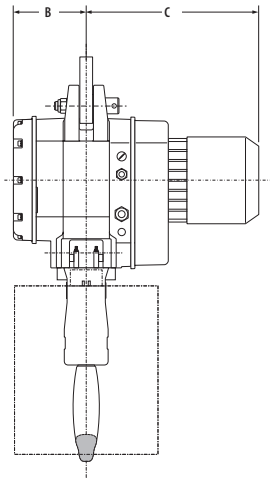

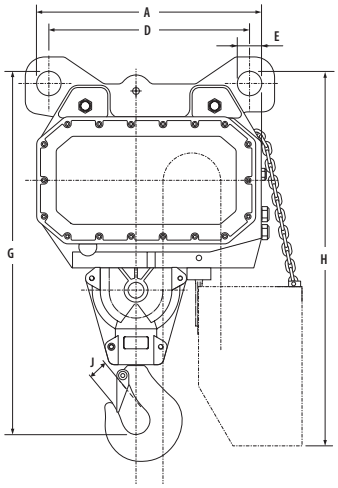

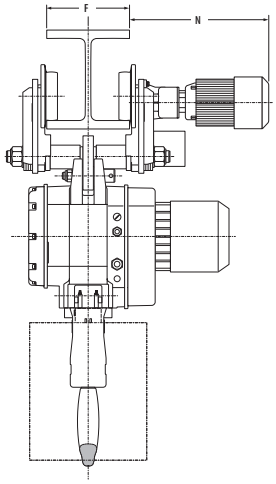

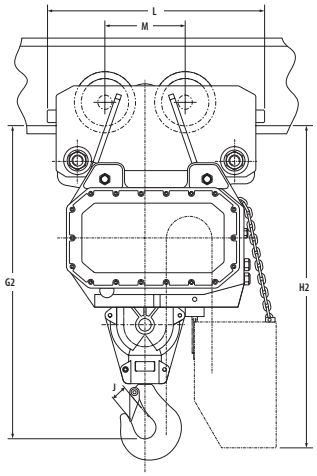

Type	WLL (kg)	Lifting speed (m/min)	Number of falls	Load chain DxT (mm)	ISO / FEM	Duty cycle (ED%-cycles/h)	Hoist motor (kW)	Standard chain bucket lifting height (m)	(A) Larger chain bucket lifting height (m)	Trolley type	Weight (kg)	Article number
LK13/5000	5.000	5,6/1,4	1	16,0 x 45,0	M4/1Am	60/40/180	6.0/1.3	10	16	12500	224,0	**0803037**
LK13/6300	6.300	5,6/1,4	1	16,0 x 45,0	M3/1Bm	60/40/150	6.4/1.6	10	16	12500	224,0	**0803039**
LK13/8000	8.000	2,8/0,7	2	16,0 x 45,0	M5/2m	60/40/240	6.0/1.3	5	8	12500	246,0	**0803041**
LK13/10000	10.000	2,8/0,7	2	16,0 x 45,0	M4/1Am	60/40/180	6.0/1.3	5	8	12500	246,0	**0803043**
LK13/12500	12.500	2,8/0,7	2	16,0 x 45,0	M3/1Bm	60/40/150	6.4/1.6	5	8	12500	246,0	**0803045**

Type	A (mm)	B (mm)	C (mm)	D (mm)	E (mm)	F (mm)	G (mm)	G2 (mm)	H (mm)	H2 (mm)	J (mm)	L (mm)	M (mm)	N (mm)
LK13/5000	567	183	434	500	66	140-310	823	901	957	1036	42	700	256	430
LK13/6300	567	183	434	500	66	140-310	823	901	957	1036	42	700	256	430
LK13/8000	567	183	434	500	66	140-310	916	994	957	1036	52	700	256	430
LK13/10000	567	183	434	500	66	140-310	916	994	957	1036	52	700	256	430
LK13/12500	567	183	434	500	66	140-310	916	994	957	1036	52	700	256	430

Rema GP wire rope hoist







The Rema Gripper is a very robust wire rope hoist that can be used vertically, horizontally, and diagonally, with capacities of 800 kg, 1,600 kg, and 3,200 kg. The shear pin and lever provide reliable indicators in case of overload.

Features
- Accurate operation.
- Virtually maintenance-free.
- Housing made of lightweight cast aluminum.
- Shear pin breaks at approx. 25% overload.
- Lever bends at approx. 50% overload.
- Shear pin(s) can be replaced under load.
- Spare shear pins are stored in the carrying handle or in the operating lever (GP-0.8).

Standard delivery
- Supplied without wire rope set.

Options
- Wire rope set, standard length 20 m.

IMPORTANT
- Check before use that the shear pin is in good condition.
- Replace the shear pin immediately if broken or damaged.
- Check before use that the wire rope is not damaged.
- Ensure the wire rope is properly inserted through both clamping jaws.
- Never use a lever or extend the handle beyond its original length.

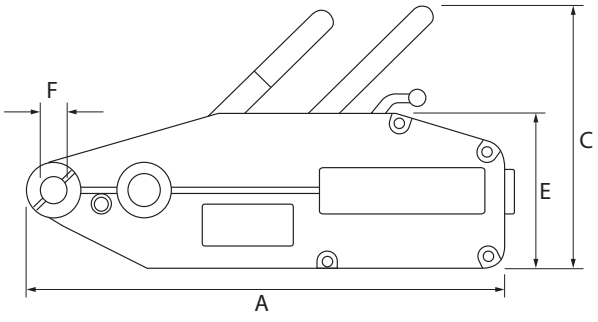

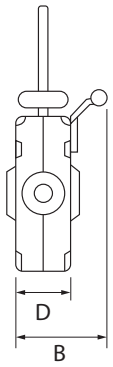

Type	WLL (kg)	Hand force max. (kg)	Lever length (mm)	Lift per handle stroke (mm)	Wire rope diameter (mm)	Weight (kg)	Article number
GP-0.8	800	28	740	52	8,3	6,1	**0350001**
GP-1.6	1.600	41	1120	55	11,0	11,9	**0350003**
GP-3.2	3.200	44	1120	28	16,1	21,1	**0350005**

Type	A (mm)	B (mm)	C (mm)	D (mm)	E (mm)	F (mm)
GP-0.8	425	65	230	59	170	22,0
GP-1.6	545	95	270	72	190	24,5
GP-3.2	660	116	325	94	220	29,5

Rema GP wire rope set



Type	WLL (kg)	Wire rope diameter (mm)	Wire rope length (m)	Article number
GP-STD8,3mm-20m	800	8,3	20	**0354001**
GP-STD11mm-20m	1.600	11,0	20	**0355001**
GP-STD16,1mm-20m	3.200	16,1	20	**0356001**

Rema GP wire rope hoist set



+



The Rema GP wire rope hoist complete with 20 m GP wire rope set.

Type	WLL (kg)	Article number
GP-SET-0,8	800	**0350001-20**
GP-SET-1,6	1.600	**0350003-20**
GP-SET-3,2	3.200	**0350005-20**

Rema radio remote control for cranes, hoists and winches



The Rema radio remote control system provides safe and user-friendly operation from a distance, ideal for lifting and hoisting applications.

With external certification SIL2, PLd safety level and a 2.4 GHz frequency (worldwide license-free), it complies with the highest safety standards.

The receiver is easy to install and ready for immediate use. Replacing a transmitter is quick and requires no opening, ensuring flexibility and convenience. Wireless control increases mobility and eliminates the risk of cable damage, improving safety, visibility, and efficiency.

Features

- Compact, robust, and waterproof design (IP65)
- Equipped with an independently PLd-certified emergency stop
- Operating range of 200+ meters in open area
- Single and dual speed control
- Operating temperature: -20 °C to +55 °C



Charging set*

Features

- Lifting/lowering
- Lifting/lowering + trolley travel
- Lifting/lowering + trolley and crane travel

Standard delivery

- 1 handheld transmitter incl. battery holder and 3 disposable 1.5 V (AAA) batteries
- 1 receiver 12-24 V AC/DC or 48-230 V AC
- 1 protective foil adapted to the application

Options

- Charging set: table charger, 2 rechargeable batteries, and adapter*
- Transmitter protective cover

Type	Function	Number of speeds	Receiver dimensions L x W x D (mm)	Transmitter dimensions L x B x D (mm)	Weight (kg)	Article number
RADIO BEST. MX8D-24V-2 H/S	lifting/lowering	2	120 x 117 x 51	85 x 193 x 43	0,28	**0726001**
RADIO BEST. MX8C-24V-2 H/S/KA	lifting/lowering/trolley travel	2	120 x 117 x 51	85 x 193 x 43	0,28	**0726003**
RADIO BEST. MX8B-24V-2 H/S/KA/KR	lifting/lowering/trolley/crane travel	2	120 x 117 x 51	85 x 193 x 43	0,28	**0726005**
RADIO BEST. MX8G-24V-1 H/S	lifting/lowering	1	120 x 117 x 51	85 x 193 x 43	0,28	**0726011**
RADIO BEST. MX8F-24V-1 H/S/KA	lifting/lowering/trolley travel	1	120 x 117 x 51	85 x 193 x 43	0,28	**0726013**
RADIO BEST. MX8H-24V-1 H/S/KA/KR	lifting/lowering/trolley/crane travel	1	120 x 117 x 51	85 x 193 x 43	0,28	**0726015**
RECHARGEABLE BATTERY SET	charging	-	-	-	-	**0726034**

2

Difference in beam profiles	44
Push trolleys	46
Hand geared trolleys	50
Spindle adjustable push trolleys and clamps	52
Spindle beam clamps	54
Electric trolleys	62

Differences in beam profiles

The wheels of Rema trolleys are designed for both straight and tapered flanges, making them suitable for a wide range of beam configurations. This ensures safe and flexible operation across different constructions.

Thanks to this clever design, Rema trolleys guarantee a perfect fit and reliable performance for the most common beam types used in the industry.
Various types of steel beam profiles can be used to mount trolleys, such as IPE, INP, HEA, and HEB. The most commonly used profiles are IPE and HEA.

For HEA and HEB profiles, the widths are identical, while the web and flange thickness differ. For IPE and INP profiles, the height is the same but the width varies, and the INP profile features a tapered flange.

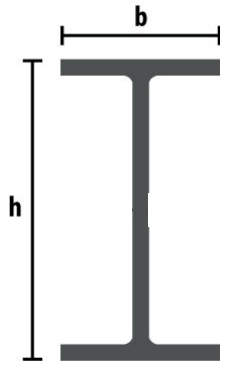

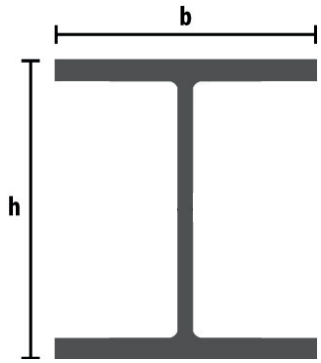

IPE	Dimensions	
	h (mm)	b (mm)
IPE 100	100	55
IPE 120	120	64
IPE 140	140	73
IPE 160	160	82
IPE 180	180	91
IPE 200	200	100
IPE 220	220	110
IPE 240	240	120
IPE 270	270	135
IPE 300	300	150
IPE 330	330	160
IPE 360	360	170
IPE 400	400	180
IPE 450	450	190
IPE 500	500	200
IPE 550	550	210
IPE 600	600	220

HEA	Dimensions	
	h (mm)	b (mm)
HEA 100	96	100
HEA 120	114	120
HEA 140	133	140
HEA 160	152	160
HEA 180	171	180
HEA 200	190	200
HEA 220	210	220
HEA 240	230	240
HEA 260	250	260
HEA 280	270	280
HEA 300	290	300
HEA 320	310	300
HEA 340	330	300
HEA 360	350	300
HEA 400	390	300
HEA 450	440	300
HEA 500	490	300
HEA 550	540	300
HEA 600	590	300
HEA 650	640	300
HEA 700	690	300

All figures are provided for reference purposes only. Rema accepts no responsibility for any direct or indirect damages resulting from the use or application of the information in this publication.

Trolley selection guide

Select the right trolley by matching the flange width (b, mm) and the required capacity (kg). Check that the trolley's adjustable range covers your beam.

Push and hand-geared trolleys



Flange width b (mm)	Capacity (kg)	Rema 116	Rema 117	Rema 211	Rema 211 BF (wide flange)	Rema 212	Rema 212 BF (wide flange)
50-150	250			✓		✓	
50-135	500			✓		✓	
50-152	500	✓					
130-300	500				✓		✓
55-140	1000			✓		✓	
64-203	1000	✓					
140-300	1000				✓		
65-155	2000			✓		✓	
88-203	2000	✓					
150-300	2000				✓		✓
90-160	3000			✓		✓	
100-203	3000	✓					
160-300	3000				✓		✓
90-180	5000			✓		✓	
114-203	5000	✓					
180-300	5000				✓		✓
124-305	10000		✓				
136-305	20000		✓				
175-305	30000		✓				

Trolleys for electric chain hoists



MAS EEFS EFS HFN

Flange width b (mm)	Capacity (kg)	ELEPHANT FAH/FBC		ELEPHANT ALPHA (ALC)	REMA SR	
		MAS	EEFS	MAS ALC	EFS	HFN
	150			✓		
	250			✓		
	500			✓		
50-300	500				✓	✓
75-300	500	✓				
66-300	1000		✓			
75-300	1000	✓				
66-300	2000		✓		✓	✓
100-300	2000	✓				
100-300	3000	✓				
82-300	3200		✓		✓	✓
90-310	6300				✓	✓
140-310	12500				✓	

Rema 116 push trolley



The Rema 116 push trolley is a robust and reliable solution for moving loads along a beam. With its adjustable flange width and solid design, this model is suitable for a wide range of industrial applications.

Features

- Adjustable flange width using spacer washers.
- Suitable for various beam profiles, with both straight and tapered flanges.
- Equipped with solid steel, machined wheels.
- Fitted with maintenance-free ball bearings.
- Wheel fracture and anti-tilt protection for enhanced safety.

Application

Manual load travel on I- and H-beams, in combination with hoists or other lifting devices.

Important:
Always specify the correct flange width.

Standard delivery

- Complete push trolley, ready for use.

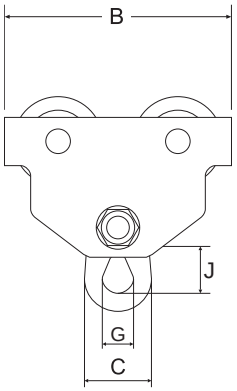

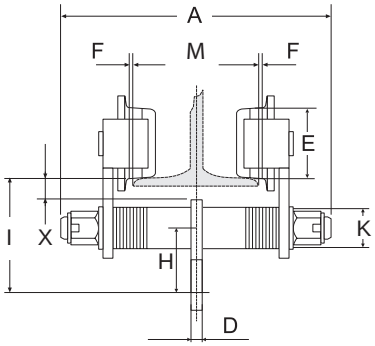

Type	WLL (kg)	Flange width M (mm)	Min. radius (mm)	Weight (kg)	Article number
116-0.5	500	50 - 152	800	6,5	**0921001**
116-1.0	1.000	64 - 203	1000	10,5	**0921003**
116-2.0	2.000	88 - 203	1100	17,5	**0921005**
116-3.0	3.000	100 - 203	1300	27,0	**0921007**
116-5.0	5.000	114 - 203	1400	41,0	**0921009**

Type	A (mm)	B (mm)	C (mm)	D (mm)	E (mm)	F (mm)	G (mm)	H (mm)	I (mm)	J (mm)	X (mm)
116-0.5	245	199	51,0	6,0	55	1,5 - 3,0	24	37	105	25	25
116-1.0	311	246	62,5	8,0	68	1,5 - 3,0	30	46	125	31	31
116-2.0	327	276	76,0	12,0	80	1,5 - 3,0	36	58	150	40	40
116-3.0	343	332	86,0	13,6	100	1,5 - 3,0	42	90	171	69	69
116-5.0	355	377	109,0	16,4	110	1,5 - 3,0	48	110	196	86	86

Rema Stainless Steel 118 push trolley



The Rema Stainless Steel 118 push trolley is designed for environments where corrosion resistance and durability are essential. Manufactured from high-grade stainless steel, this trolley offers reliable performance and enhanced safety, even under demanding conditions.

Features

- Adjustable flange width using spacer washers.
- Equipped with solid stainless steel, machined wheels.
- Wheel fracture and anti-tilt protection for maximum safety.
- Stainless steel AISI-304 construction.

Application

Ideal for humid, aggressive, or hygienic environments such as food, chemical or offshore industries.

Standard delivery

Complete push trolley, ready for use.

Important:
Always specify the correct flange width.

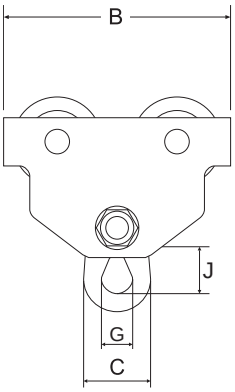

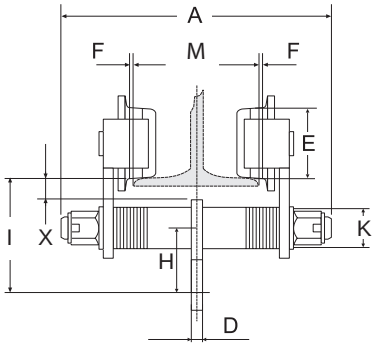

Type	WLL (kg)	Flange width M (mm)	Min. radius (mm)	Weight (kg)	Article number
118-500	500	50-152	900	9,5	**0922101**
118-1000	1.000	64-203	1000	13,0	**0922103**

Type	A (mm)	B (mm)	C (mm)	D (mm)	E (mm)	F (mm)	G (mm)	H (mm)	I (mm)	J (mm)	X (mm)	K (mm)
118-500	244	200	50	8	55	1,5-3,5	24	52,5	111	32	34,0	30
118-1000	310	246	62	10	68	1,5-3,5	30	67	138	40	39,5	40

Rema 211/211BF push trolley



The Rema 211/211BF push trolleys are designed for smooth and safe horizontal load movement. With their compact construction and adjustable flange widths, they are optimized for low headroom applications when combined with Rema Select 200 OD manual chain hoists.

Features

- Suitable for both straight and sloping flanges.
- Adjustable flange width using spacer washers.
- Machined steel wheels with maintenance-free ball bearings.
- Low headroom design in combination with Rema Select 200 OD chain hoists (0.5 / 1.0 / 2.0 t) using a special link that replaces the top hook.
- Wheel fracture and anti-tilt protection for maximum safety.
- Maintenance-free and easy to use.

Important: Always specify the correct flange width.

211: Standard version.
211BF: Wide flange version.



Low-headroom setup with Rema Select 200 OD: special link replaces the top hook.

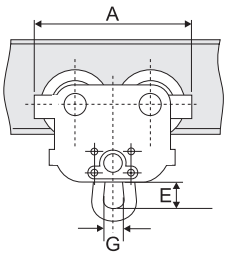

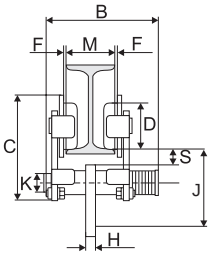

Type	WLL (kg)	Flange width M (mm)	Min. radius (mm)	Weight (kg)	Article number
211-0.25-50/152	250	50-152	800	4,6	**0924000**
211-0.5-50/135	500	50-135	800	6,8	**0924001**
211-1.0-55/140	1.000	55-140	1000	11,2	**0924003**
211-2.0-65/155	2.000	65-155	1100	16,9	**0924005**
211-3.0-90/160	3.000	90-160	1300	28,6	**0924007**
211-5.0-90/180	5.000	90-180	1500	44,8	**0924009**
211BF-0.5-130/215	500	130-215	800	6,8	**0924101**
211BF-0.5-215/300	500	215-300	800	6,8	**0924102**
211BF-1.0-140/215	1.000	140-215	1000	11,2	**0924201**
211BF-1.0-215/300	1.000	215-300	1000	11,2	**0924202**
211BF-2.0-150/230	2.000	150-230	1100	16,9	**0924301**
211BF-2.0-230/300	2.000	230-300	1100	16,9	**0924302**
211BF-3.0-160/230	3.000	160-230	1300	28,6	**0924401**
211BF-3.0-230/300	3.000	230-300	1300	28,6	**0924402**
211BF-5.0-180/230	5.000	180-230	1500	44,8	**0924501**
211BF-5.0-230/300	5.000	230-300	1500	44,8	**0924502**

Type	A (mm)	B (mm)	C (mm)	D (mm)	E (mm)	F (mm)	G (mm)	H (mm)	J (mm)	K (mm)	S (mm)
211-0.25-50/152	188	208	137	50	29	1,5~3,0	28	6	104	20	27
211-0.5-50/135	205	198	150	55	30	1,5~3,0	28	8	111	28	27
211-1.0-55/140	242	211	174	68	30	1,5~3,0	32	10	118	32	28
211-2.0-65/155	270	238	194	80	49	1,5~3,0	40	12	147	36	27
211-3.0-90/160	325	246	234	100	60	1,5~3,0	49	14	177	44	29
211-5.0-90/180	370	280	267	110	79	1,5~3,0	59	16	219	55	29
211BF-0.5-130/215	205	278	150	55	30	1,5~3,0	28	8	111	28	27
211BF-0.5-215/300	205	363	150	55	30	1,5~3,0	28	8	111	28	27
211BF-1.0-140/215	242	286	174	68	30	1,5~3,0	32	10	118	32	28
211BF-1.0-215/300	242	371	174	68	30	1,5~3,0	32	10	118	32	28
211BF-2.0-150/230	270	313	194	80	49	1,5~3,0	40	12	147	36	27
211BF-2.0-230/300	270	383	194	80	49	1,5~3,0	40	12	147	36	27
211BF-3.0-160/230	325	316	234	100	60	1,5~3,0	49	14	177	44	29
211BF-3.0-230/300	325	386	234	100	60	1,5~3,0	49	14	177	44	29
211BF-5.0-180/230	370	330	267	110	79	1,5~3,0	59	16	219	55	29
211BF-5.0-230/300	370	330	267	110	79	1,5~3,0	59	16	219	55	29

Rema HFN push trolley for SR electric chain hoists



The Rema HFN push trolley is designed exclusively for use in combination with the Rema SR electric chain hoist series (see p. 36). It provides a safe and reliable travel solution, ensuring smooth horizontal movement and maximum safety.

Features

- Double support axle.
- Anti-tilt and anti-drop protection.
- Machined steel wheels for durability.
- Supplied without assembly and adapter plates.

Important:
Always specify the correct flange width.

Application

Specifically designed for safe integration with the Rema SR electric chain hoist series. Ideal for industrial lifting and material handling where reliability and compatibility are essential.



Low-headroom setup with Rema SR electric chain hoist: adapter plate integrates the hoist without a top hook.

Standard delivery

- Complete trolley, ready for integration with Rema SR hoists.

Options

- Assembly plates and adapter plates available separately.

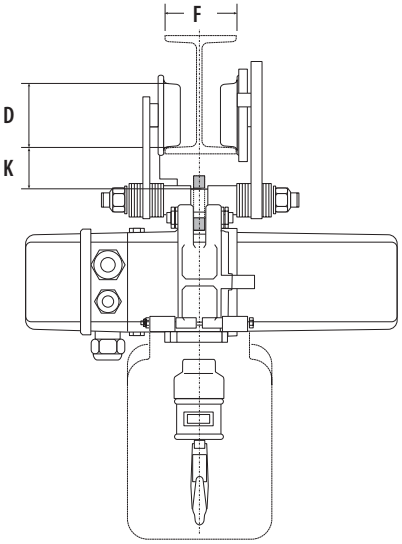

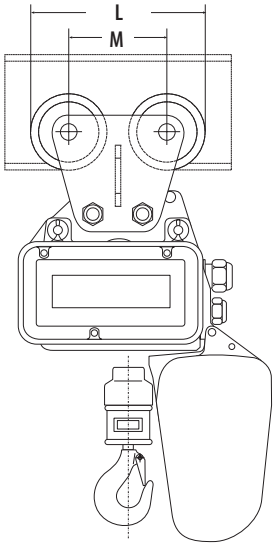

Type	WLL (kg)	Trolley wheel diameter (mm)	Flange width F (mm)	K (mm)	L (mm)	M (mm)	Weight (kg)	Article number
HFN500	500	70	50-300	33	200,0	112,0	8,0	**0814001**
HFN2000	2.000	70	66-300	35	200,0	112,0	10,0	**0814003**
HFN3200	3.200	103	82-300	35	288,5	152,5	22,0	**0814005**
HFN6300	6.300	122	90-310	36	351,0	191,0	47,0	**0814007**

Rema 117 hand geared trolley



The Rema 117 hand geared trolley is designed for smooth and precise manual travel on beams. With adjustable flange width and robust construction, it ensures safe and reliable load handling in a wide range of lifting applications.

Features

- Adjustable flange width by means of spacer washers.
- Machined solid steel wheels.
- Wheel fracture and anti-tilt protection for increased safety.
- Galvanized hand chain 5 x 23.7 mm.
- Suitable for various beam profiles.
- Equipped with 2 load-bearing axles.

Important:
Always specify the correct flange width.

Standard delivery

- Standard operating height: 3 m.

Options

- Other operating heights available on request.

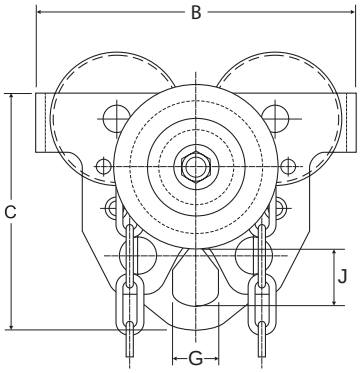

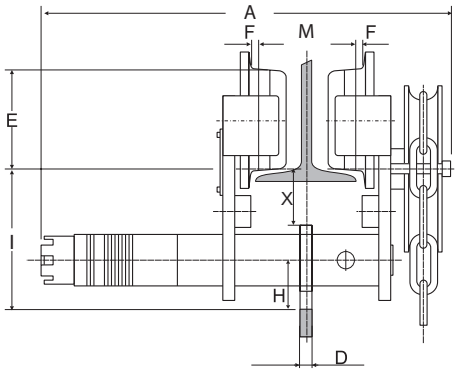

Type	WLL (kg)	Flange width M (mm)	Min. radius (mm)	Weight (kg)	Article number
117-10.0	10.000	124-305	2000	94,0	**0922011**
117-20.0	20.000	136-305	3500	174,0	**0922013**
117-30.0	30.000	175-305	6000	333,0	**0922015**

Type	A (mm)	B (mm)	C (mm)	D (mm)	E (mm)	F (mm)	G (mm)	H (mm)	I (mm)	J (mm)	X (mm)
117-10.0	525	442	396	30	136	2,0-3,5	92	120	190	137	45
117-20.0	600	555	498	30	175	2,0-3,5	92	120	233	137	58
117-30.0	640	760	620	40	175	2,0-3,5	106	130	283	155	68

Rema 212/212BF hand geared trolley



The Rema 212/212BF hand geared trolleys are the low-headroom solution for precise and reliable manual load travel. They are designed to be combined with Rema Select hand chain hoists (see p. 6) and are ideal for industrial and workshop environments where space efficiency and safety are critical.

Important: Always specify the correct flange width.

212: Standard version.
212BF: Wide flange version.

Features

- Suitable for both straight and sloping beam flanges.
- Adjustable flange width by means of spacer washers.
- Machined steel wheels with maintenance-free bearings.
- Low headroom design in combination with Rema Select 200 OD hand chain hoists (0.5 / 1.0 / 2.0 t) using the same connector 90 degrees turned, that replaces the top hook.
- Wheel fracture and anti-tilt protection for maximum safety.
- Maintenance-free and user-friendly.
- Galvanized hand chain 5 × 23.7 mm.

Standard delivery

- Standard operating height: 3 m.

Options

- Other operating heights available on request.

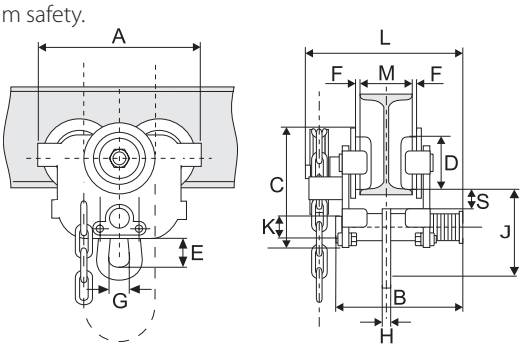

Type	WLL (kg)	Flange width M (mm)	Min. radius (mm)	Weight (kg)	Article number
212-0.5-50/135	500	50-135	800	8,0	**0925001**
212-1.0-55/140	1.000	55-140	1000	12,4	**0925003**
212-2.0-65/155	2.000	65-155	1100	18,1	**0925005**
212-3.0-90/160	3.000	90-160	1300	30,3	**0925007**
212-5.0-90/180	5.000	90-180	1500	46,5	**0925009**
212BF-0.5-130/215	500	130-215	800	8,0	**0925101**
212BF-0.5-215/300	500	215-300	800	8,0	**0925102**
212BF-1.0-140/215	1.000	140-215	1000	12,4	**0925201**
212BF-1.0-215/300	1.000	215-300	1000	12,4	**0925202**
212BF-2.0-150/230	2.000	150-230	1100	18,1	**0925301**
212BF-2.0-230/300	2.000	230-300	1100	18,1	**0925302**
212BF-3.0-160/230	3.000	160-230	1300	30,3	**0925401**
212BF-3.0-230/300	3.000	230-300	1300	30,3	**0925402**
212BF-5.0-180/230	5.000	180-230	1500	46,5	**0925501**
212BF-5.0-230/300	5.000	230-300	1500	46,5	**0925502**

Type	A (mm)	B (mm)	C (mm)	D (mm)	E (mm)	F (mm)	G (mm)	H (mm)	J (mm)	K (mm)	L (mm)	S (mm)
212-0.5-50/135	205	198	150	55	30	1,5~3,0	28	8	111	28	239	27
212-1.0-55/140	242	211	174	68	30	1,5~3,0	32	10	118	32	254	28
212-2.0-65/155	270	238	194	80	49	1,5~3,0	40	12	147	36	277	27
212-3.0-90/160	325	246	234	100	60	1,5~3,0	49	14	177	44	287	29
212-5.0-90/180	370	280	267	110	79	1,5~3,0	59	16	219	55	320	29
212BF-0.5-130/215	205	278	150	55	30	1,5~3,0	28	8	111	28	239	27
212BF-0.5-215/300	205	363	150	55	30	1,5~3,0	28	8	111	28	239	27
212BF-1.0-140/215	242	286	174	68	30	1,5~3,0	32	10	118	32	254	28
212BF-1.0-215/300	242	371	174	68	30	1,5~3,0	32	10	118	32	254	28
212BF-2.0-150/230	270	313	194	80	49	1,5~3,0	40	12	147	36	277	27
212BF-2.0-230/300	270	383	194	80	49	1,5~3,0	40	12	147	36	277	27
212BF-3.0-160/230	325	316	234	100	60	1,5~3,0	49	14	177	44	287	29
212BF-3.0-230/300	325	386	234	100	60	1,5~3,0	49	14	177	44	287	29
212BF-5.0-180/230	370	330	267	110	79	1,5~3,0	59	16	219	55	320	29
212BF-5.0-230/300	370	400	267	110	79	1,5~3,0	59	16	219	55	320	29

Rema Select 30S spindle push trolley



The Rema Select 30S spindle push trolley is a lightweight and versatile solution for mounting on a wide range of steel profiles. With its quick spindle locking system, this trolley is perfect for installation and assembly work where flexibility, speed, and safety are required.

Features

- Suitable for both straight and sloping beam flanges.
- Equipped with machined steel wheels and maintenance-free bearings.
- Compact and lightweight design.
- Quick installation via threaded spindle.
- Added safety through spindle locking mechanism.
- Fitted with wheel fracture protection.
- Robust steel construction.

Important:
Always specify the correct flange width.

Application

Ideal for industrial lifting and material handling where reliability and compatibility are essential.

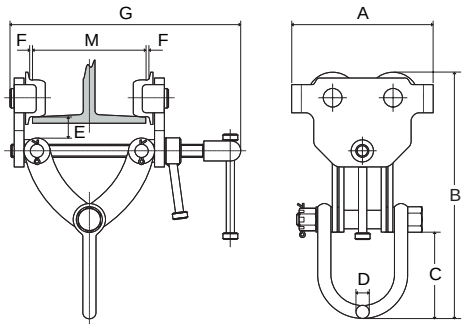

Type	WLL (kg)	Flange width M (mm)	Min. radius (mm)	A (mm)	B min (mm)	B max (mm)	C (mm)	D (mm)	E (mm)	G (mm)	Weight (kg)	Article number
S30S 005	500	64 - 203	1100	174	263	324	105	16	25,4	340	6,0	**0918001**
S30S 010	1.000	63 - 203	1100	174	263	324	105	16	25,4	340	7,0	**0918003**
S30S 020	2.000	76 - 203	1300	280	339	387	111	22	25,4	340	20,0	**0918005**
S30S 030	3.000	76 - 203	1400	345	374	438	127	27	26,0	345	32,0	**0918007**
S30S 050	5.000	100 - 305	1500	395	450	528	135	35	81,0	465	53,0	**0918009**

Rema RMBT spindle push trolley



The Rema RMBT spindle push trolley is a compact and durable solution designed for quick and secure installation on beams. Its threaded spindle with locking system ensures stability and safety, making it the heavier-duty alternative to the Rema Select 30S for frequent industrial use.

Features

- Suitable for both straight and sloping beam flanges.
- Equipped with machined steel wheels and maintenance-free bearings.
- Compact and lightweight design.
- Fitted with wheel fracture protection.
- Secured with locking pin.

Important:
Always specify the correct flange width.

Application

Ideal for frequent use in workshops and industrial environments where reliable spindle trolley installation is required.

2.0 t

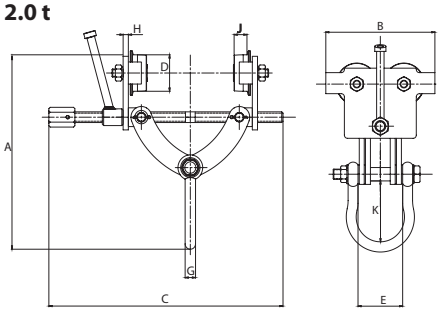

3.0 - 10.0 t

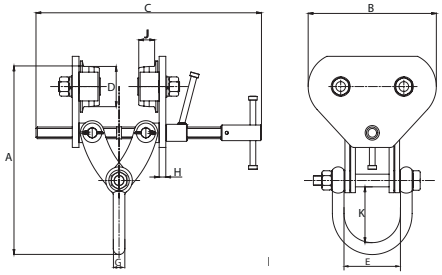

Type	WLL (kg)	Flange width (mm)	A min (mm)	B (mm)	C (mm)	D (mm)	E (mm)	G (mm)	H (mm)	J (mm)	K (mm)	Weight (kg)	Article number
RMBT-2T	2.000	76-203	272	176	360	54,5	72,0	16,0	8	21	95	7,0	**0940002**
RMBT-3T	3.000	76-203	381	270	475	82,5	118,5	25,5	14	33	113	25,0	**0940003**
RMBT-6T	6.000	105-305	429	356	560	125,0	116,0	26,0	16	34	100	52,0	**0940006**
RMBT-10T	10.000	160-305	541	430	630	145,0	119,0	32,0	16	41	110	74,0	**0940010**

Rema RMSLT autolock push trolley



The Rema RMSLT autolock push trolley allows for fast and easy installation by simply closing the self-locking trolley around the beam flange. This compact and lightweight trolley is especially suited for temporary lifting applications where quick installation and safety are essential.

Features

- Suitable for both straight and sloping beam flanges.
- Equipped with machined steel wheels and maintenance-free bearings.
- Compact and lightweight design.
- Fitted with wheel fracture protection.
- Secured with locking pin.

Application

Ideal for temporary hoisting setups and quick installation tasks where flexibility and safety are required.

Important:
Always specify the correct flange width.

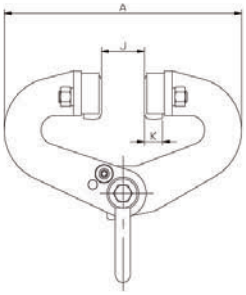

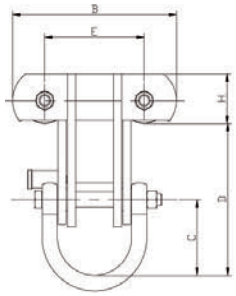

Type	WLL (kg)	Flange width (mm)	A (mm)	B (mm)	C (mm)	D (mm)	E (mm)	H (mm)	J (mm)	K (mm)	Weight (kg)	Article number
RMSLT-3T	3.000	76-230	380	280	126	253	170	82	25	32	21,0	**0942003**
RMSLT-6T	6.000	100-305	500	296	126	290	170	88	30	38	32,0	**0942006**
RMSLT-10T	10.000	120-305	600	310	131	290	170	113	44	43	54,0	**0942010**

Rema 115 push trolley with spindle axle



The Rema 115 spindle push trolley is a compact and lightweight trolley designed for light industrial applications. It provides a simple and cost-effective solution for moving loads along a beam where ease of use and fast installation are important.

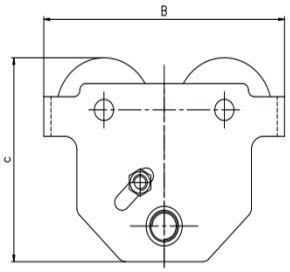

Features:

- Designed for light industrial applications.
- Compact and lightweight design.
- Easy and quick installation.
- Wheel fracture and anti-tilt protection for maximum safety.

Important:
Always specify the correct flange width.

Application

Suitable for light-duty hoisting and transport applications in workshops and small-scale industrial environments.

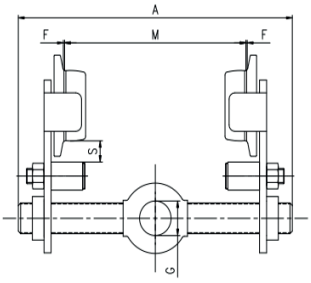



Type	WLL (kg)	Flange width M (mm)	Trolley wheel diameter (mm)	A (mm)	B (mm)	C (mm)	G (mm)	S (mm)	F (mm)	Weight (kg)	Article number
115-0,5	500	50-220	55	295	200	154,5	27	14-34	1,5-3,0	5,2	**0950001**
115-1	1.000	64-220	68	305	245	184,0	34	18-38	1,5-3,0	9,3	**0950003**
115-2	2.000	88-220	80	305	276	212,0	46	18-38	1,5-3,0	13,8	**0950005**

Rema CSV spindle beam clamp



The Rema CSV spindle beam clamp is designed for lifting steel beams or to create a (semi-)permanent suspension point. Its spindle mechanism allows for quick and reliable attachment, ensuring maximum safety during use.

Features

- Beam clamp with spindle for quick and easy mounting.
- Safety factor of 5 × WLL.
- Each clamp is proof-tested at 2 × WLL.

Application

Suitable for lifting steel beams and can be used as (semi-)permanent hoisting eye in industrial and construction environments.

Important:
Always specify the correct flange width.

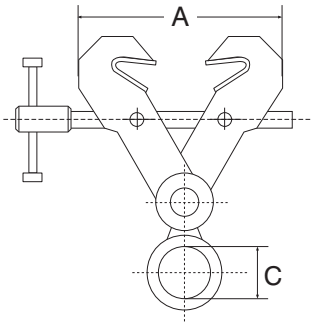

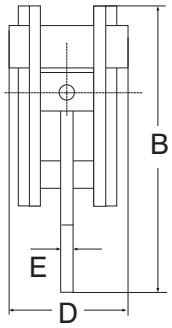

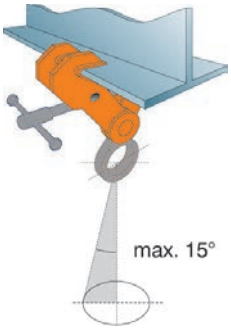

Type	WLL (kg)	Jaw opening (mm)	Max. flange thickness (mm)	A (mm)	B (mm)	C (mm)	D (mm)	E (mm)	Weight (kg)	Article number
CSV-1.0	1.000	75-190	30	135-250	300	75	120	16	4,0	**3368001**
CSV-2.0	2.000	75-190	30	135-250	300	75	120	16	5,0	**3368002**
CSV-3.0	3.000	75-190	30	135-250	300	75	120	16	5,0	**3368003**
CSV-5.0	5.000	150-300	40	230-380	450	80	180	20	15,0	**3368005**

Rema KSB spindle beam clamp



The Rema KSB spindle beam clamp is designed for the safe lifting and transportation of steel beams or to use as a (semi-)permanent suspension point. Its compact construction and low headroom design make it highly efficient in industrial lifting applications.

Features

- Low headroom design.
- Easy mounting with spindle mechanism.
- Suitable for IPE and INP beams.
- Safety factor 4 × WLL.
- Each clamp is proof-tested at 2 × WLL.

Important:
Always specify the correct flange width.

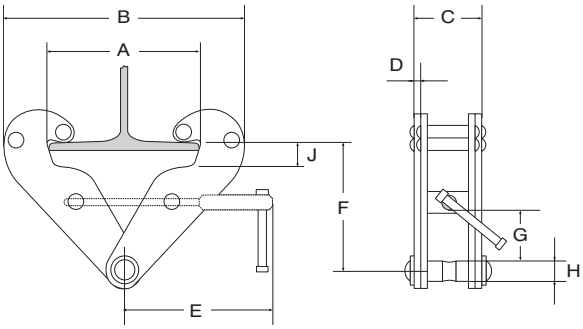

Type	WLL (kg)	Jaw opening (mm)	Max. flange thickness J (mm)	A max (mm)	B min (mm)	B max (mm)	C (mm)	D (mm)	E (mm)	F max (mm)	F min (mm)	G (mm)	H (mm)	Weight (kg)	Article number
KSB-1	1.000	80-240	19	220	180	360	64	5	215	155	102	25	25	3,5	**3317001**
KSB-2	2.000	80-240	19	220	180	360	74	6	215	155	102	25	25	4,5	**3317002**
KSB-3	3.000	90-330	32	320	235	490	103	8	260	225	140	45	24	9,5	**3317003**
KSB-5	5.000	90-330	32	320	235	490	110	10	260	225	140	45	28	11,0	**3317005**
KSB-10	10.000	90-350	35	320	250	520	120	12	280	230	160	70	44	16,0	**3317010**

Rema KSBO spindle beam clamp



The Rema KSBO spindle beam clamp is designed for lifting and transporting steel beams or to use as a (semi-)permanent suspension point. It includes an additional spindle locking system for enhanced safety in demanding industrial environments.

Features

- Equipped with a suspension eye.
- Spindle can be folded.
- Easy installation using the spindle mechanism.
- Suitable for IPE and INP beams.
- Safety factor 4 × WLL.
- Each clamp is proof-tested at 2 × WLL.

Important:
Always specify the correct flange width.

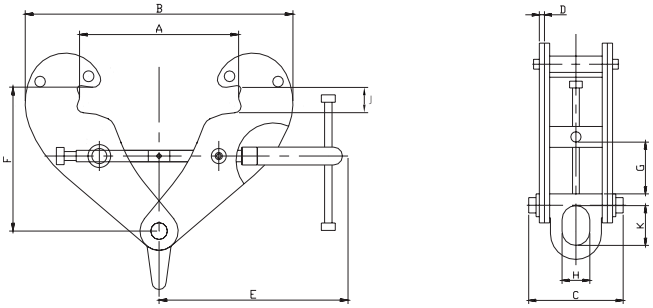

Type	WLL (kg)	Jaw opening (mm)	Max. flange thickness J (mm)	A max (mm)	B min (mm)	B max (mm)	C (mm)	D (mm)	E (mm)	F max (mm)	F min (mm)	G (mm)	H (mm)	K (mm)	Weight (kg)	Article number
KSBO-1	1.000	80-245	19	270	183	370	94	4	218	100	154	18	28	43	4,0	**3317101**
KSBO-2	2.000	80-245	19	270	183	370	102	6	218	100	154	18	28	43	5,0	**3317102**
KSBO-3	3.000	90-330	32	355	243	500	132	8	276	148	219	40	43	60	10,0	**3317103**
KSBO-5	5.000	90-330	32	355	243	500	142	10	276	148	219	40	43	60	12,0	**3317105**
KSBO-10	10.000	90-340	35	364	269	521	180	12	301	165	239	47	62	91	18,5	**3317110**

Rema RMBC spindle beam clamp



The Rema RMBC beam clamp is an adjustable spindle beam clamp designed to create a (semi-)permanent suspension point. With its compact and lightweight design, it offers quick and reliable installation in industrial environments.

Features

- Compact and lightweight construction.
- Quick and easy installation.
- Safety factor 4 × WLL.
- Each clamp is proof-tested at 2 × WLL.

Important:
Always specify the correct flange width.

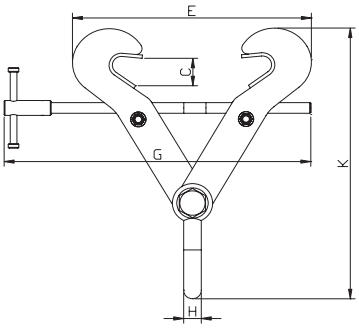

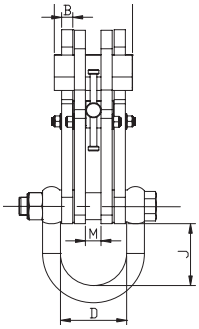

Type	WLL (kg)	Jaw opening (mm)	A max (mm)	B (mm)	C (mm)	D (mm)	E max (mm)	G (mm)	H (mm)	J (mm)	K min (mm)	M (mm)	Weight (kg)	Article number
RMBC-2T	2.000	76-190	125	14	27	107	272	276	20	85	254	42,5	4,0	**3318201**
RMBC-3T	3.000	76-190	130	14	27	107	272	276	20	85	254	42,5	8,0	**3318203**
RMBC-5T	5.000	150-305	140	14	46	122	450	409	25	99	319	57,5	15,0	**3318205**
RMBC-6T	6.000	203-457	140	14	55	116	600	559	25	99	418	50,0	18,8	**3318206**
RMBC-10T	10.000	203-457	140	20	55	119	600	559	32	99	418	28,0	28,0	**3318210**
RMBC-15T	15.000	203-457	175	20	76	120	681	660	40	185	555	28,0	47,0	**3318215**
RMBCE-15T	15.000	406-610	175	20	76	120	834	810	40	185	634	28,0	52,8	**3318216**

Rema RMBCV spindle beam clamp with adjustable jaws



The Rema RMBCV adjustable jaw beam clamp is designed with movable jaws that automatically adapt to the beam flanges, ensuring an optimal grip. This design allows for larger jaw openings, making it suitable for a wide range of beam dimensions and demanding applications.

Features

- Robust steel construction.
- Large jaw openings.
- Quick and easy installation.
- Adjustable jaws ensure a secure grip on various beam profiles.
- Safety factor 4 × WLL.
- Each clamp is proof-tested at 2 × WLL.

Important:
Always specify the correct flange width.



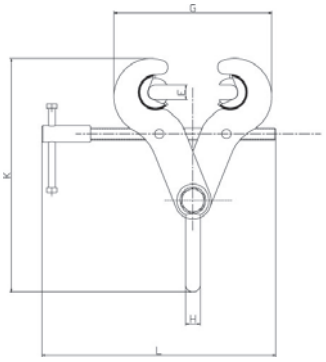

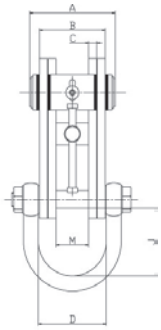

Type	WLL (kg)	Jaw opening (mm)	A (mm)	B (mm)	C (mm)	D (mm)	E (mm)	G max (mm)	H (mm)	J (mm)	K min (mm)	L (mm)	M (mm)	Weight (kg)	Article number
RMBCV-3T	3.000	89-305	144	102	8	107	25,4	418	20	100	322	410	10,0	10,0	**3318303**
RMBCV-5T	5.000	89-305	144	118	14	122	25,4	418	25	115	346	409	57,5	15,5	**3318305**
RMBCV-10T	10.000	89-305	144	114	20	119	25,4	426	32	106	355	409	28,0	22,0	**3318310**

Rema RMAC angle beam clamp



The Rema RMAC angle beam clamp is a spindle clamp designed to create a secure (semi-)permanent suspension point on angle profiles. The clamp is secured by tightening of the spindle, preventing it to slip off of the profile.

Features

- Quick and easy installation.
- Suitable for various sizes of angle beams.
- Robust and durable construction.
- Safety factor 4 × WLL.
- Each clamp is proof-tested at 2 × WLL.

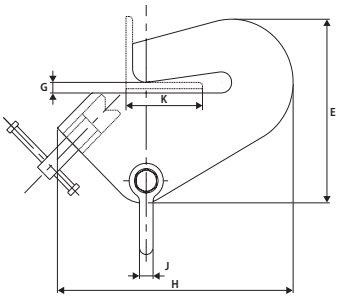

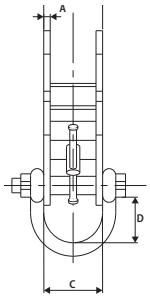

Type	WLL (kg)	A (mm)	B (mm)	C (mm)	D (mm)	E (mm)	G (mm)	H (mm)	K (mm)	J (mm)	Weight (kg)	Article number
RMAC-1T	1.000	6	69	70	96	206	15,0	258	38-101	16	4,5	**3318403**
RMAC-1.5T	1.500	8	99	107	98	270	19,0	346	50-152	20	11,0	**3318405**
RMAC-3T	3.000	10	99	107	98	343	25,4	490	101-203	20	21,5	**3318407**

Rema RMMC installation clamp



The Rema RMMC installation clamp is designed to allow beams or structures to be lifted using two manual chain hoists. It ensures safe and controlled positioning of loads during installation, provided sufficient clearance is available above the beam.

Features

- Robust construction for safe and stable lifting.
- Designed specifically for use with two manual chain hoists.
- Ensures precise and controlled positioning during installation.
- Safety factor 4 × WLL.
- Each clamp is proof-tested at 2 × WLL.

Ensure sufficient clearance above the beam for safe operation.



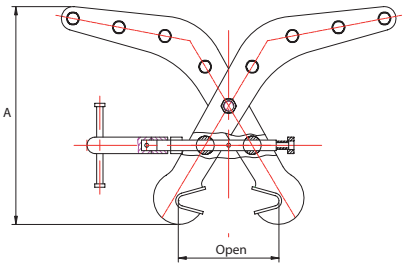

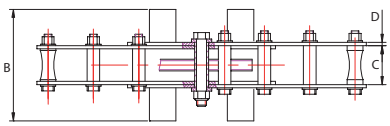

Type	WLL (kg)	Flange width (mm)	A (mm)	B (mm)	C (mm)	D (mm)	Weight (kg)	Article number
RMMC-0.2T	200	90-204	357	150	60	4	7,2	**3318501**

Superclamp S-series spindle beam clamp



The Superclamp S-Series is an adjustable spindle beam clamp designed to create a (semi-)permanent suspension point on steel beams. Its lightweight construction makes it easy to install, reliable, and suitable for versatile use in industrial environments.

Features

- Compact and lightweight construction.
- Quick and easy installation.
- Provides a safe and reliable suspension point.

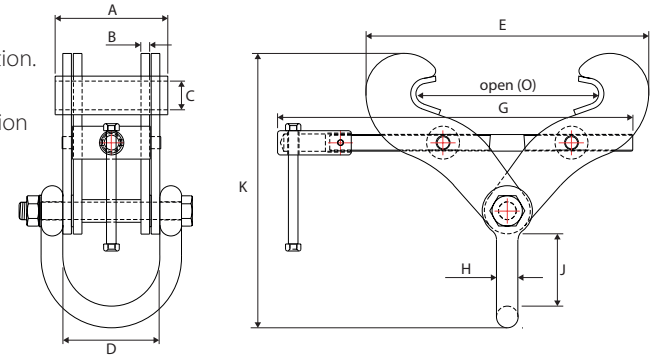

Type	WLL (kg)	Jaw opening O (mm)	A (mm)	B (mm)	C (mm)	D (mm)	E (mm)	G (mm)	H (mm)	J (mm)	K (mm)	Weight (kg)	Article number
S1*	2.000	76-190	125	3,0	22	90,0	188	275	20	77	250	4,0	**3502001**
S2*	3.000	76-190	125	6,0	22	90,0	188	275	20	77	250	5,1	**3502003**
S2A*	3.000	76-190	130	12,5	22	102,0	250	275	20	103	268	7,4	**3502005**
S3*	4.000	150-254	130	10,0	22	112,0	327	410	25	98	332	10,4	**3502007**
S3X*	5.000	76-190	130	12,5	22	116,0	237	295	25	110	300	9,0	**3502009**
S3A*	5.000	150-305	140	12,5	32	116,0	373	410	25	110	360	14,9	**3502011**
S4	7000	101-228	140	12,5	42	118,0	323	410	32	120	382	18,8	**3502012**
S4S	6.000	203-457	140	12,5	42	118,0	323	410	32	120	382	17,5	**3502013**
S4A	10.000	203-457	140	12,5	42	116,0	498	560	25	110	459	27,3	**3502015**
S12	15.000	203-457	170	20,0	42	118,0	498	560	32	112	476	53,8	**3502017**
S14	15.000	406-610	175	20,0	50	116,5	611	660	40	185	616	63,0	**3502019**

Superclamp S-Series spindle beam clamp with pivoting jaws



The Superclamp S-Series with pivoting jaws is an adjustable spindle beam clamp that automatically adapts to beam flanges. Thanks to its pivoting jaws, it allows for larger flange ranges, providing secure and versatile suspension points.

Features

- Robust steel construction.
- Large jaw openings.
- Quick and easy installation.

Alternative: see RMBCV (p. 56).

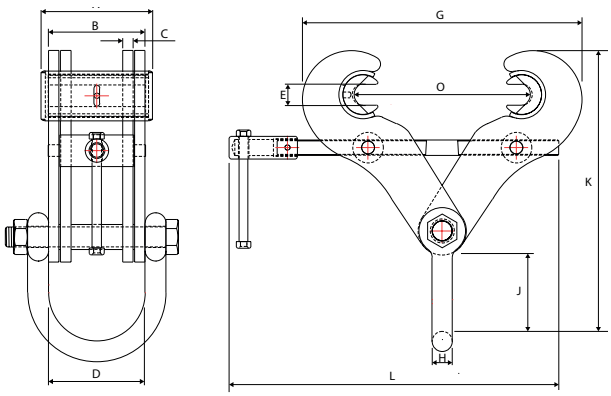

Type	WLL (kg)	Jaw opening O (mm)	A (mm)	B (mm)	C (mm)	D (mm)	E (mm)	G (mm)	H (mm)	J (mm)	K (mm)	L (mm)	Weight (kg)	Article number
S5	3.000	89-305	134	93	6	95	25,4	348	25	102	359	410	10,0	**3503001**
S5A	3.000	3000	134	116	10	116	25,4	348	25	110	375	410	13,8	**3503003**
S6	5.000	5000	134	116	10	116	25,4	348	25	110	375	410	13,8	**3503005**
S6A	5000	5000	134	116	12.5	116	25,4	348	25	110	375	410	15,2	**3503007**
S11	10.000	10000	134	116	20	118	25,4	348	25	112	391	410	20,6	**3503009**

Superclamp USC- series spindle beam clamp



The Superclamp USC Series is an adjustable spindle beam clamp engineered to withstand lateral loading. Its fixed suspension eye allows safe load handling in all directions, making it highly versatile for demanding lifting applications

Application

Suitable for lifting, hoisting, pulling, or creating a secure (semi-)permanent suspension point on steel beams and profiles where lateral loading occurs.

Features

- Equipped with a special locking device to prevent movement along the beam.
- Fitted with a fixed suspension eye that allows load handling in any direction.

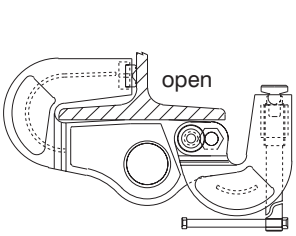

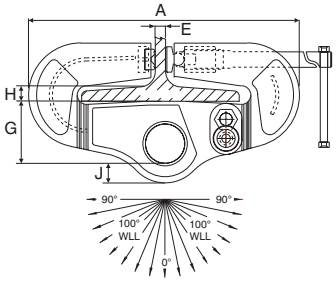

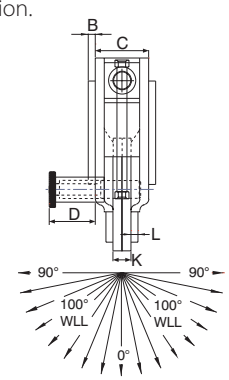

Type	WLL (kg)	Jaw opening (mm)	A (mm)	B (mm)	C (mm)	D (mm)	E (mm)	G (mm)	H (mm)	J (mm)	Weight (kg)	Article number
USC3A	3.000	125-204	387	-	70	48	32	100	25,4	28	13,8	**3507007**
USC4	4.000	125-305	518	10	70	48	32	100	25,4	28	23,5	**3507009**
USC5	5.000	125-305	524	10	75	48	32	120	25,4	38	28,4	**3507011**

Superclamp AC-series spindle beam clamp



Suitable for lifting, hoisting, pulling, or creating a secure (semi-)permanent suspension point on steel beams and profiles where lateral loading occurs.

Application

Suitable for lifting, hoisting, pulling, or creating a secure (semi-)permanent suspension point on steel beams and profiles where lateral loading occurs.

Features

- Easy and quick installation.
- Suitable for various sizes of angle profiles.
- Robust and durable construction.

Alternative: see RMAC (p. 57).

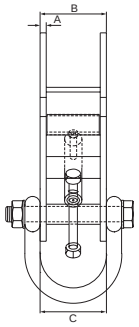

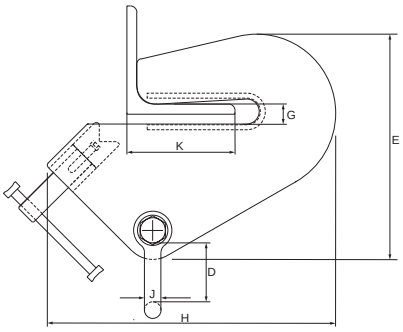

Type	WLL (kg)	Jaw opening (mm)	A (mm)	B (mm)	C (mm)	D (mm)	E (mm)	G (mm)	H (mm)	J (mm)	K (mm)	Weight (kg)	Article number
AC1	500	15,0	4	65	70	102	206	15,0	258	16	38-101	4,5	**3508001**
AC2	1.000	15,0	6	69	70	96	206	15,0	258	16	38-101	5,5	**3508003**
AC3	1.500	15,0	8	86	90	73	270	15,0	346	20	50-152	11,0	**3508005**
AC4	3.000	25,4	10	90	102	101	343	25,4	490	20	101-203	21,5	**3508007**

Superclamp A-series autolock push trolley



The Superclamp A Series is a push trolley with automatic locking, offering quick and secure attachment to the beam. Its compact and safe design makes it an excellent choice for efficient manual load transport.

Application

Suitable for quick installation on I- and H-beams, providing safe manual load travel in combination with hoists.

Features

- Simple and very quick attachment to the beam.
- Equipped with wheel fracture protection.
- Maximum flange thickness: Type A1 = 28 mm, A2/A3 = 30 mm.

Alternative: see RMSLT (p. 53).

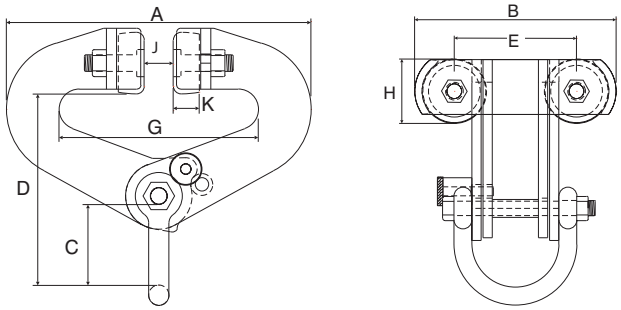

Type	WLL (kg)	Flange width (mm)	A (mm)	B (mm)	C (mm)	D (mm)	E (mm)	G (mm)	H (mm)	J (mm)	K (mm)	Weight (kg)	Article number
A1	3.000	76-230	380	280	110	250	170	76-230	82	30	32	21,0	**3512001**
A2	6.000	100-305	500	296	110	290	170	100-305	88	40	38	33,0	**3512003**
A3	10.000	100-305	580	290	135	310	170	100-305	109	40	38	47,5	**3512005**

Superclamp B-series spindle push trolley



The Superclamp B Series is a robust adjustable spindle push trolley with a locking handle for enhanced safety. It offers quick installation and is built for reliable manual load transport in demanding applications.

Application

Suitable for manual load transport along I- and H-beams, in combination with hoists or lifting devices, where extra safety is required.

Features

- Heavy-duty construction.
- Quick attachment via threaded spindle.
- Locking handle for added safety.
- Equipped with wheel fracture protection.

Alternative: see RMBT-2 type (p. 2).

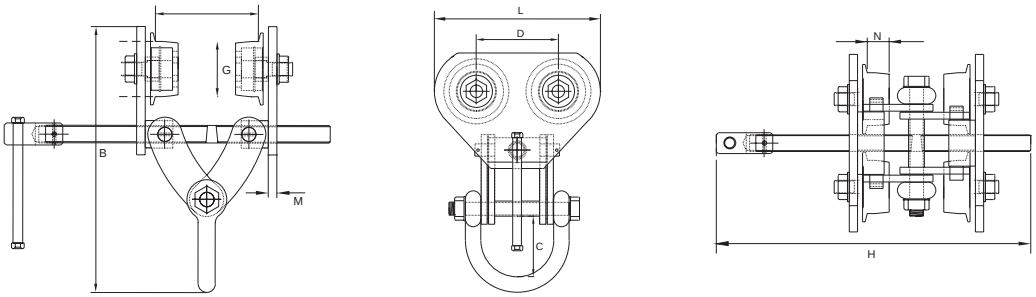

Type	WLL (kg)	Flange width (mm)	A (mm)	B (mm)	C (mm)	D (mm)	G (mm)	H (mm)	L (mm)	N (mm)	Weight (kg)	Article number
B1	3.000	76-203	76-203	395	112	133	82	480	269	33	23,5	**3514001**
B2	6.000	105-305	105-305	515	100	176	125	560	356	34	50,0	**3514003**
B3	10.000	105-305	105-305	570	130	200	145	785	430	41	74,5	**3514005**

Superclamp BA-series spindle push trolley

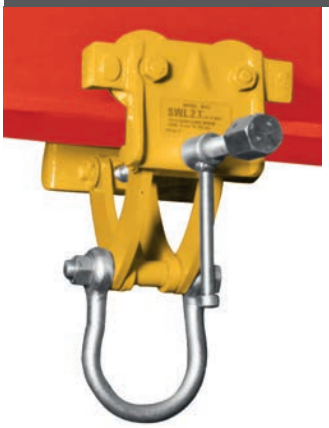

The Superclamp BA Series is a compact and lightweight adjustable spindle push trolley, equipped with a spindle locking system for added safety. It provides a reliable solution for quick beam installation and safe manual load transport.

Application

Suitable for manual load transport along I- and H-beams, in combination with hoists or lifting devices.

Features

- Compact and lightweight design.
- Quick installation via threaded spindle.
- Spindle locking system for added safety.
- Equipped with wheel fracture protection.
- Maximum flange thickness:
  BA1 = 28 mm, BA2/3 = 30 mm.

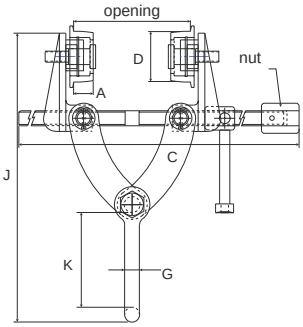

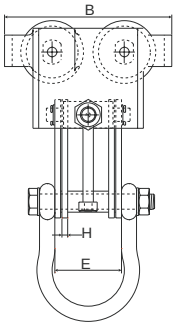

Type	WLL (kg)	Flange width (mm)	A (mm)	B (mm)	C (mm)	D (mm)	E (mm)	G (mm)	H (mm)	J (mm)	K (mm)	Weight (kg)	Article number
BA1	1.000	63-203	14	176	360	46	70	16	6	309	101	6,5	**3513001**
BA2	1.500	76-203	21	176	360	54	70	16	6	309	101	7,2	**3513003**
BA3	2.000	76-203	21	176	360	54	70	16	8	309	101	7,2	**3513005**

Elephant MAS electric trolley



The Elephant MAS electric trolley is exclusively available in combination with the Elephant FAH/FBH electric chain hoist 400 V (see page 28). It provides a robust and reliable travel solution, ensuring safe and smooth horizontal load movement.

Important:
Always specify the correct flange width.

Application

Designed for use with Elephant FAH/FBH electric chain hoists, providing safe and reliable powered travel on I- and H-beams.

Features

- Single support axle
- 1 travel speed
- Wheel fracture and anti-tilt protection
- Supplied with 24 V pendant control unit including emergency stop
- Simple plug-in connection

Technical specifications

- Travel speed: 10 m/min
- Operating voltage: 400 V
- Control voltage: 24 V
- Protection class: IP54
- Duty cycle: 120 starts/hour, ED 30%
- Insulation class: E
- Motor power: 0.4 kW

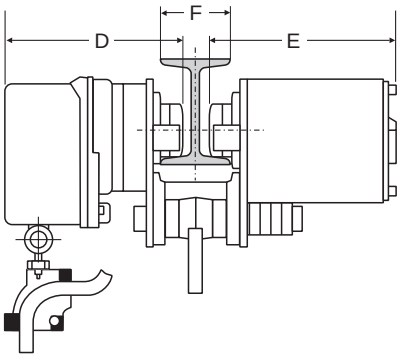

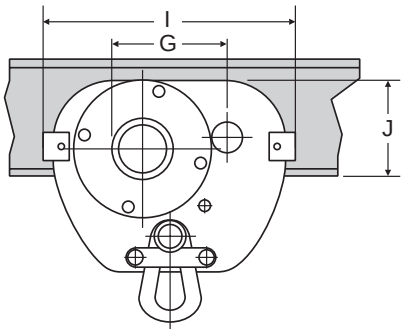

Type	WLL (kg)	Min. radius (mm)	Travel speed (m/min)	Operating voltage (V)	Flange width (mm)	Protection class IP	Duty cycle (%)	Insulation class	Power output (kW)	Weight (kg)	Article number
MAS-0.5	500	1100	10	400	75-300	IP54	30	E	0,4	31,0	**0920001**
MAS-1.0	1.000	1100	10	400	75-300	IP54	30	E	0,4	31,0	**0920003**
MAS-2.0	2.000	1500	10	400	100-300	IP54	30	E	0,4	40,0	**0920005**
MAS-3.0	3.000	1500	10	400	100-300	IP54	30	E	0,4	64,0	**0920007**

Type	D (mm)	E (mm)	F (mm)	G (mm)	I (mm)	J (mm)
MAS-0.5	228	248	75-300	120	242	102
MAS-1.0	228	248	75-300	120	242	102
MAS-2.0	245	265	100-300	148	288	120
MAS-3.0	234	318	100-300	117	310	154

Rema EFS electric trolley (for SR electric chain hoists)



The Rema EFS electric trolley is designed exclusively for integration with the Rema SR electric chain hoist series (see page 36). It provides smooth and reliable powered travel, ensuring maximum compatibility and safety in industrial lifting applications.

Important:
Always specify the correct flange width.

Application

Specifically designed for use with Rema SR electric chain hoists, ensuring reliable and safe powered travel in industrial and workshop environments.

Features

- Double support axle
- 2 travel speeds
- Wheel fracture, Anti-tilt and anti-drop protection
- Standard delivery with machined steel wheels
- Supplied without counterweight
- Supplied without pendant control unit
- Supplied without assembly and adapter plates

Technical specifications

- Travel speed: 5/ 20 or 4/ 16 m/min, depending on WLL
- Operating voltage: 400 V
- Protection class: IP54
- Duty cycle: ED 40%
- Insulation class: F
- Motor power: 0.04 / 0.18 kW

Options

- Control voltage 24 V
- Limit switch

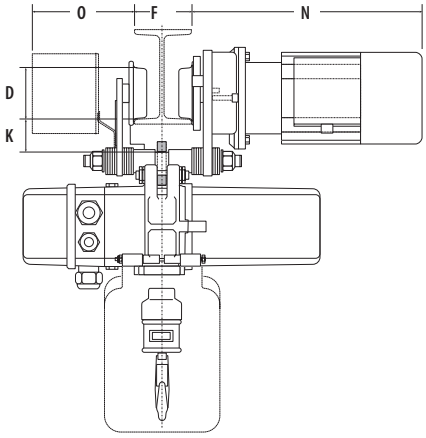

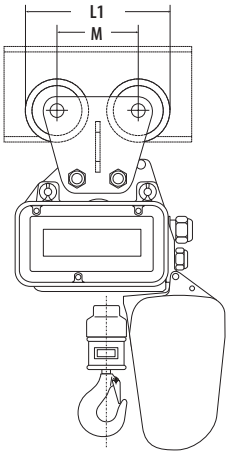

Type	WLL (kg)	Operating voltage (V)	Insulation class	Protection class IP	Travel speed (m/min)	Motor (kW)	Weight (kg)	Article number
EFS500	500	400	F	IP54	5/20	0.04/0.18	19,0	**0818001**
EFS2000	2.000	400	F	IP54	5/20	0.04/0.18	18,0	**0818005**
EFS3200	3.200	400	F	IP54	5/20	0.04/0.18	34,0	**0818007**
EFS6300	6.300	400	F	IP54	4/16	0.06/0.25	63,0	**0818009**
EFS12500	12.500	400	F	IP54	4/16	0.12/0.55	274,0	**0818011**

Type	Wheel diameter D (mm)	F (mm)	K (mm)	L1 (mm)	M (mm)	N (mm)	O (mm)	Min. radius (mm)
EFS500	70	50-300	33	216	112,0	292	280	1000
EFS2000	70	66-300	35	216	112,0	292	280	1500
EFS3200	103	82-300	38	293.5	152,5	385	280	1500
EFS6300	122	90-310	38	293.5	152,5	409	280	2000
EFS12500	150	140-310	38	351	191,0	409	280	2500

Rema EEFS electric trolley (2 speeds)



The Rema EEFS single-axle electric trolley is designed for smooth and efficient powered travel. It can be combined with virtually any electric chain hoist, providing reliable performance for a wide range of industrial applications.

Important:
Always specify the correct flange width.

Application

Designed for use with Elephant FAH/FBH electric chain hoists, providing safe and reliable powered travel on I- and H-beams.

Features

- Single support axle
- 2 travel speeds
- Wheel fracture, Anti-tilt and anti-drop protection
- Standard delivery with machined steel wheels
- Supplied without counterweight
- Supplied without pendant control unit
- Supplied without assembly and adapter plates

Technical specifications

- Travel speed: 5/ 20 or 4/ 16 m/min, depending on WLL
- Operating voltage: 400 V
- Protection class: IP54
- Duty cycle: ED 40%
- Insulation class: F
- Motor power: 0.04 / 0.18 kW

Options

- Control voltage 24 V
- Limit switch

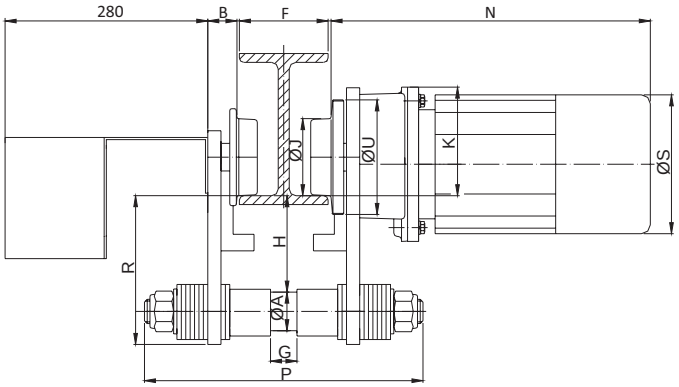

Type	WLL (kg)	Flange width (mm)	Travel speed (m/min)	Operating voltage (V)	Protection class IP	Duty cycle (%) (starts/h)	Insulation class	Power output (kW)	Min. radius (mm)	Weight (kg)	Article number
EEFS10	1.000	66-300	5/20	400	IP54	356	109	140	1000	22,0	**0821001**
EEFS20	2.000	66-300	5/20	400	IP54	356	135	140	1500	25,0	**0821003**
EEFS32	3.200	82-300	5/20	400	IP54	356	156	140	2000	40,0	**0821005**

Type	A (mm)	B (mm)	F (mm)	G (mm)	H (mm)	J (mm)	K (mm)	N (mm)	R (mm)	S (mm)	U (mm)
EEFS10	28/32/35	26,5	66-300	24	71	70	122	356	109	140	104
EEFS20	35/40/45	26,5	66-300	24	87.5	70	122	356	135	140	104
EEFS32	45/50/55	28,0	82-300	32	93	103	122	356	156	140	141

Rema adjustable trolley buffers



Rema adjustable trolley buffers are designed for installation on monorail I- or H-beams with a flat flange, serving as end stops to limit trolley travel. Model KB1 is supplied with a durable yellow coating for high visibility.

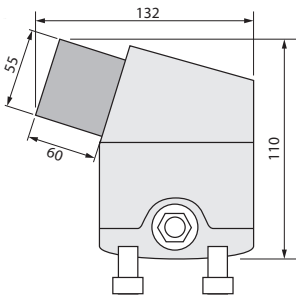

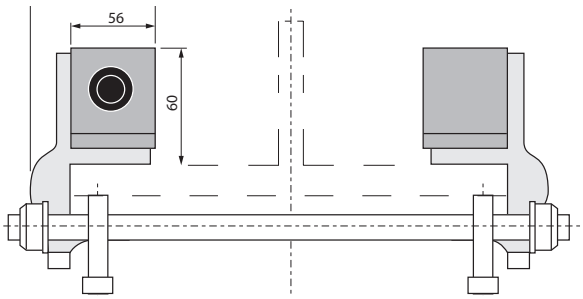

Type	Flange width (mm)	Trolley wheel diameter (mm)	Maximum flange thickness (mm)	Weight (kg)	Article number
KB1	80-300	60-160	25	3,4	**4468000**

Rema adjustable trolley buffers, galvanized



Rema adjustable trolley buffers are designed for installation on monorail I- or H-beams with a flat flange, serving as end stops to limit trolley travel. Model KB2 is supplied with a galvanized finish for enhanced corrosion protection.

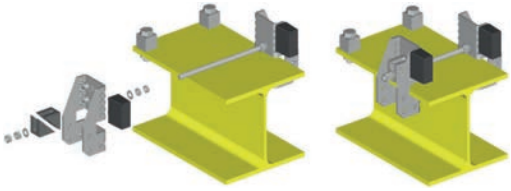

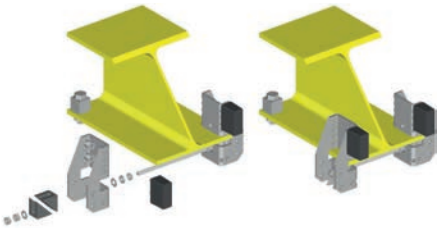

Type	Flange width (mm)	Trolley wheel diameter (mm)	Flange thickness (mm)	Weight (kg)	Article number
KB2	82-300	60-160	7-25	2,5	**4468300**

3

Dynamometers 68

TEO mechanical crane scale 73



Rema DSD04 dynamometer



The Rema DSD04 dynamometer is supplied complete with hard case, operating manual, and calibration certificate.

Mechanical properties
- Anodized aluminum housing.
- Ingress Protection IP64.
- Overload indication at 110% of rated capacity.
- Proof load: 2 × WLL.
- Safety factor: 5 x WLL.

Specifications
- Alkaline battery (9 V type).
- Operating time approx. 100 hours.
- LCD display with 5 digits, character height 17 mm.
- Operating temperature: -10°C to +55°C.
- Accuracy approx. ±0.15% of reading.

Functional specifications
- Automatic zero calibration on power-up.
- Simple menu selection: ON/OFF, tare, peak and hold.
- Self-calibration at zero and load value.
- Display of gross, net, and tare weight.
- Peak function retains maximum measured load.
- Hold function retains the displayed value.
- Selectable units: kg, t, ton, lb, daN, kN.
- Automatic power-off.

Standard delivery
- Hard case.
- Operating manual.
- Calibration certificate.

Options
- Optional bow shackles from 10 t onwards.



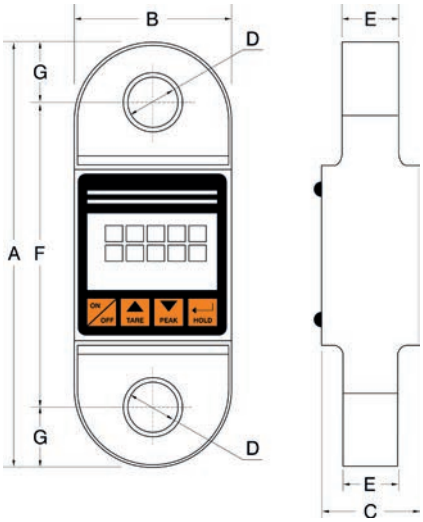

Type	WLL (kg)	Resolution (kg)	A (mm)	B (mm)	C (mm)	D (mm)	E (mm)	F (mm)	G (mm)	Shackle (t)	Weight (kg)	Article number
DSD04-1.25	1.250	0,5	192	85	54	15	16	142	25,0	1,50 INCL.	1,15	**1508000**
DSD04-2.5	2.500	1,0	218	85	54	21	25	160	28,0	3,25 INCL.	1,35	**1508001**
DSD04-5.0	5.000	2,0	230	85	54	27	32	165	32,5	6,50 INCL.	1,85	**1508003**
DSD04-10.0	10.000	5,0	315	100	59	38	49	200	57,5	12 EXCL.	3,60	**1508005**
DSD04-20.0	20.000	10,0	350	126	70	55	70	210	70,0	25 EXCL.	5,50	**1508007**

Rema DSD04TX/RX dynamometer with remote control and display



The Rema DSD04TX/RX dynamometer is supplied complete with a wireless handheld display (with RS232 port for printer or PC connection), rechargeable batteries with charger, transmission range up to 50 m, hard case, operating manual, and calibration certificate.

Mechanical properties

- Anodized aluminum housing.
- Ingress Protection IP64.
- Overload indication at 110% of rated capacity.
- Proof load: 2 × WLL.
- Safety factor: 5 x WLL.

Specifications

Main unit:

- Rechargeable batteries including charger.
- Charger input: 230 VAC, output 20 VDC.
- Operating time approx. 100 hours.
- LCD display with 5 digits, character height 17 mm.
- Operating temperature: -10°C to +55°C.
- Accuracy approx. ±0.15% of reading.

Handheld receiver:

- RX port (RS232)
- Alkaline batteries (3 × AA).
- Operating time approx. 150 hours.
- Battery status indicator.
- LCD display with 5 digits, character height 12 mm.
- 433.92 MHz frequency.
- Transmission range up to 50 m.
- Ambient temperature –5 °C to +55 °C.

Functional specifications

- Automatic zero calibration on power-up.
- Simple menu selection: ON/OFF, tare, peak and hold.
- Self-calibration at zero and load value.
- Display of gross, net, and tare weight.
- Peak function retains maximum measured load.
- Hold function retains the displayed value.
- Selectable units: kg, t, ton, lb, daN, kN.
- Automatic power-off.



Standard delivery

- Wireless handheld display (RX).
- Rechargeable batteries with charger.
- Hard case.
- Operating manual.
- Calibration certificate.

Options

- Optional bow shackles from 10 t onwards.

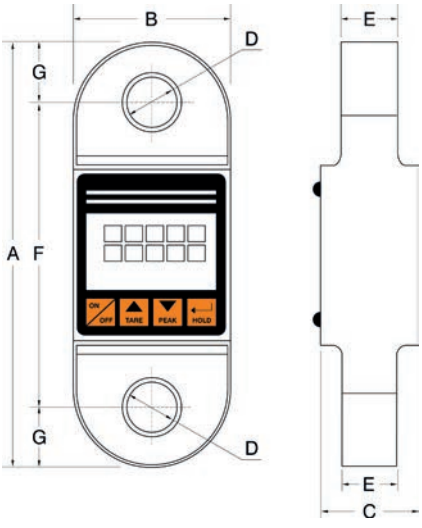

Type	WLL (kg)	Resolution (kg)	A (mm)	B (mm)	C (mm)	D (mm)	E (mm)	F (mm)	G (mm)	Shackle (t)	Weight (kg)	Article number
DSD04-05TX/RX	5.000	2	230	85	54	27	32	168	32,5	6,5 INCL.	1,85	**1512003**
DSD04-10TX/RX	10.000	5	315	100	59	38	49	200	57,5	12 EXCL.	3,60	**1512005**
DSD04-25TX/RX	25.000	10	350	126	70	53	70	210	70,0	25 EXCL.	5,50	**1512009**
DSD04-50TX/RX	50.000	20	430	128	100	72	100	260	90,0	55 EXCL.	13,50	**1512011**

Rema DSD05 dynamometer



The Rema DSD05 dynamometer is supplied complete with hard case, operating manual, and calibration certificate.

Mechanical properties
- Aluminum housing.
- Alloy steel load cell.
- Ingress Protection: IP65.
- Proof load: 2 × WLL.
- Safety factor: 5 × WLL.

Specifications
- Alkaline batteries (3 × AA type).
- Operating time approx. 180 hours.
- LCD display with 5 digits, character height 25 mm.
- Operating temperature: -5°C to +55°C.
- Accuracy approx. ±0.1% of reading.
- Battery status indicator.

Functional specifications
- Automatic zero calibration on power-up.
- Digital zero and weight adjustment.
- Digital stabilizing filter for improved damping of load fluctuations.
- Tare, peak, and hold function.
- Selectable units: kg, N, kN, lb.
- Automatic power-off.



Standard delivery
- Hard case.
- Operating manual.
- Calibration certificate.

Options
- Optional U-13 bow shackles (ref. 2635013) available for 0.6 t and 1.0 t models.

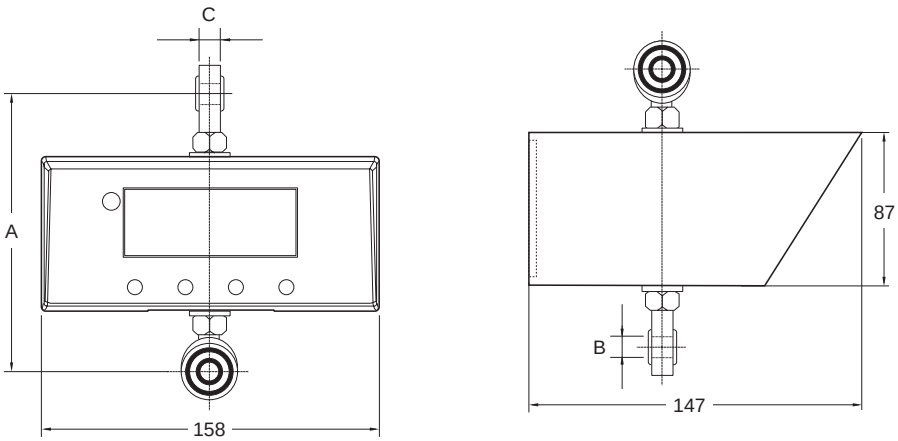

Type	WLL (kg)	Resolution (kg)	A (mm)	B (mm)	C (mm)	D (mm)	E (mm)	F (mm)	Shackle (t)	Weight (kg)	Article number
DSD05-0.6T	600	0,2	170	16	21	-	-	-	U-13 EXCL.	2,68	**1514001**
DSD05-1.0T	1.000	0,5	170	16	21	-	-	-	U-13 EXCL.	2,68	**1514003**

Rema DSD05T dynamometer with remote taring control



The Rema DSD05T dynamometer is supplied complete with a wireless handheld remote for taring, two matching bow shackles for the 3.2 t and 6.3 t versions (shackles for 10 t available on request), hard case, operating manual, and calibration certificate.

Mechanical properties

- Aluminum housing.
- Alloy steel load cell.
- Ingress Protection: IP65.
- Proof load: 2 × WLL.
- Safety factor: 5 × WLL.

Specifications

- Alkaline batteries (3 × AA type).
- Operating time approx. 180 hours.
- LCD display with 5 digits, character height 25 mm.
- Operating temperature: -5°C to +55°C.
- Accuracy approx. ±0.1% of reading.
- Battery status indicator.

Functional specifications

- Automatic zero calibration on power-up.
- Digital zero and weight adjustment.
- Digital stabilizing filter for improved damping of load fluctuations.
- Tare, peak, and hold function.
- Remote control for taring.
- Selectable units: kg, N, kN, lb.
- Automatic power-off.



Standard delivery

- Bow shackles (3.2 t and 6.3 t).
- Remote control for taring.
- Hard case.
- Operating manual.
- Calibration certificate.

Options

- Optional bow shackles from 10 t onwards.

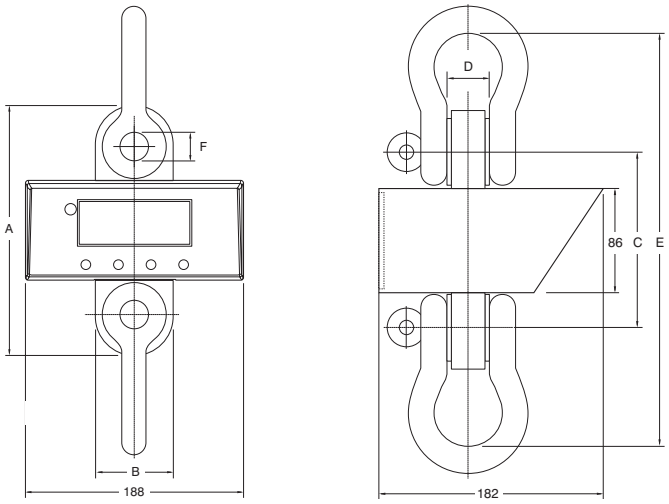

Type	WLL (kg)	Resolution (kg)	A (mm)	B (mm)	C (mm)	D (mm)	E (mm)	F (mm)	Shackle (t)	Weight (kg)	Article number
DSD05T-3.2T	3.200	1	199	69	130	25	269	20	3.25 INCL.	4,2	**1514005**
DSD05T-6.3T	6.300	2	213	69	144	35	348	26	6.5 INCL.	6,5	**1514007**
DSD05T-10.0T	10.000	5	265	100	181	50	455	36	12 EXCL.	10,5	**1514009**

Rema DSD05TX/RX dynamometer with remote control and display



The Rema DSD05TX/RX dynamometer is supplied complete with a wireless handheld display (with RS232 port for printer or PC connection), two matching bow shackles for the 3.2 t and 6.3 t versions (bow shackles for 10 t available on request), transmission range up to 50 m, hard case, operating manual, and calibration certificate.

Mechanical properties
- Aluminum housing.
- Alloy steel load cell.
- Ingress Protection: IP65.
- Proof load: 2 × WLL.
- Safety factor: 5 × WLL.

Specifications

Main unit:
- Alkaline batteries (3 × AA type).
- Operating time approx. 180 hours.
- Battery status indicator.
- LCD display with 5 digits, character height 25 mm.
- Operating temperature: -5°C to +55°C.
- Accuracy approx. ±0.1% of reading.

Handheld receiver:
- RX port (RS232)
- Alkaline batteries (3 × AA type).
- Operating time approx. 150 hours.
- LCD display with 5 digits, character height 12 mm.
- 868 MHz frequency.
- Transmission range up to 50 m.
- Ambient temperature –5 °C to +55 °C.
- Battery status indicator.



Functional specifications
- Automatic zero calibration on power-up.
- Digital zero and weight adjustment.
- Digital stabilizing filter for improved damping of load fluctuations.
- Tare, peak, and hold function.
- Remote handheld display with wireless connection.
- Selectable units: kg, N, kN, lb.
- Automatic power-off.

Standard delivery
- Bow shackles (3.2 t and 6.3 t).
- Remote handheld display (RX).
- Hard case.
- Operating manual.
- Calibration certificate.

Options
- Optional bow shackles from 10 t onwards.

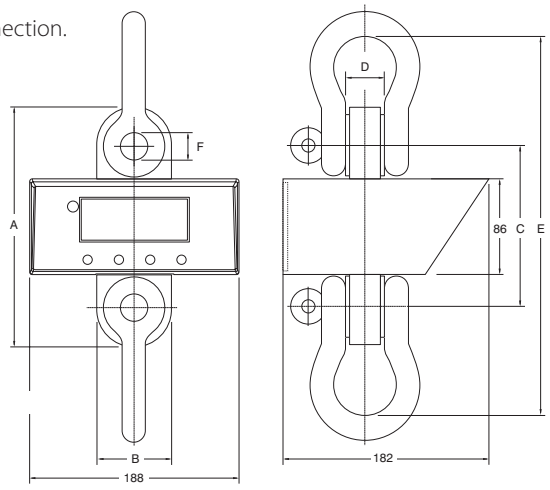

Type	WLL (kg)	Resolution (kg)	A (mm)	B (mm)	C (mm)	D (mm)	E (mm)	F (mm)	Shackle (t)	Weight (kg)	Article number
DSD05TX/RX-3.2T	3.200	1	199	69	130	25	269	20	3.25 INCL.	4,2	**1513005**
DSD05TX/RX-6.3T	6.300	2	213	69	144	35	348	26	6.5 INCL.	6,5	**1513007**
DSD05TX/RX-10.0T	10.000	5	265	100	181	50	455	36	12 EXCL.	10,5	**1513009**

TEO crane scale



The TEO mechanical crane scale is available with a single suspension eye and hook up to 5,000 kg, and with double eyes for capacities from 12,500 kg up to 85,000 kg.

Features

- Very robust construction.
- Lightweight.
- Plexiglass with rubber edge protects the display.
- Accuracy within 1% of full scale.
- Easy trimming for zero adjustment.
- Safety factor: 5 (4 for TEO-5,000 and above)

Options

- Remote reading.
- Bow shackles.

TEO-200/TEO-5000



TEO-12.500/TEO-85.000

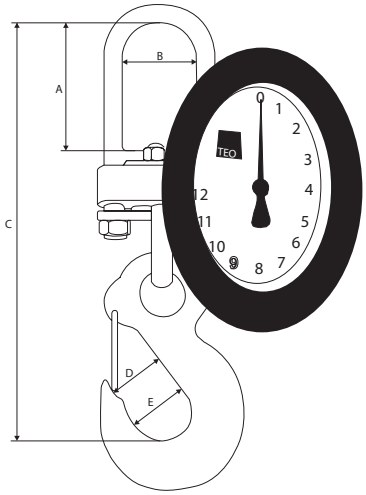

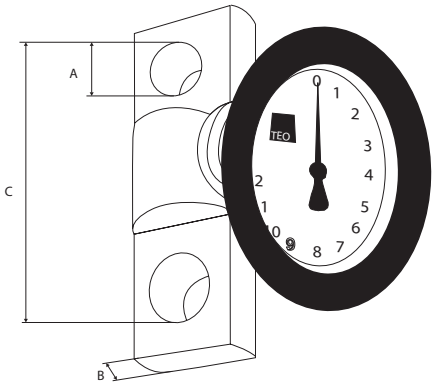

Type	WLL (kg)	Resolution (kg)	A (mm)	B (mm)	C (mm)	D (mm)	E (mm)	Weight (kg)	Article number
TEO-200	200	1	60	53	230	27	35	5,0	**1550001**
TEO-320	320	2	60	53	230	27	35	5,0	**1550003**
TEO-500	500	2	60	53	230	27	35	5,0	**1550005**
TEO-750	750	5	60	53	230	27	35	5,0	**1550007**
TEO-1250	1.250	5	60	53	230	27	35	5,0	**1550009**
TEO-2000	2.000	10	60	53	230	27	35	5,0	**1550011**
TEO-3200	3.200	20	75	53	280	34	46	5,5	**1550013**
TEO-5000	5.000	20	75	53	300	42	56	6,5	**1550015**
TEO-12.500	12.500	50	40	41	213	-	-	8,1	**1550017**
TEO-25.000	25.000	100	55	42	267	-	-	12,9	**1550019**
TEO-50.000	50.000	200	75	56	329	-	-	30,0	**1550021**
TEO-85.000	85.000	500	85	60	390	-	-	60,0	**1550023**

4

Hand winches	76
Wall mounted hand winches	81
Pulleyman winch	81
Electric hoisting winch	84
Accessories	87
Wire rope sheaves and snatch blocks	90



DL/DLC hand winch

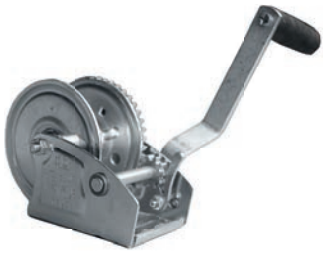

The DL/DLC series is a zinc-plated manual hand winch designed for pulling only; it provides reliable performance for a wide range of pulling tasks and is not suitable for lifting.

-

Features

- Zinc-plated finish; DL-3500B supplied with black drum.
- DLC-1100/1400/1800 fitted with a one-way pawl and freewheel position.
- Hardened steel gears for durability.
- Removable crank handle.
- Dual-speed mechanism on DL-2500AB and DL-3500B models.

Important:
Not suitable for lifting.

Standard delivery

- Supplied without wire rope or strap.

Always order the correct rope or strap set

Options

- Wire rope set with latch hook.
- Webbing strap set with hook.

DLC-1100

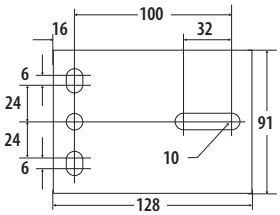

DLC-1400

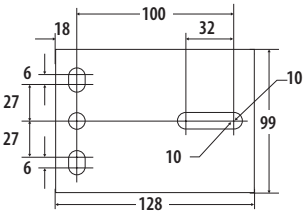

DL-2500AB

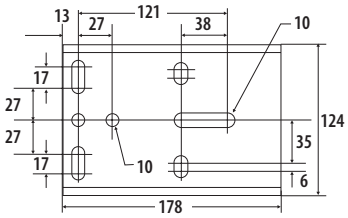

DL-3500B

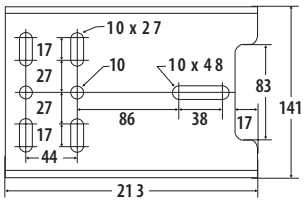

Type	WLL (kg)	Max. rope length (m)	Rope diameter (mm)	Drum diameter (mm)	Drum width (mm)	Gear ratio	Handle length (mm)	Handle effort (kg)	Weight (kg)	Article number
DLC-1100	499	20,0	5	22,2	50	4.4:1	178,0	58	2,6	**2117023**
DLC-1400	635	12,0	6	22,2	53	4.4:1	241,3	74	3,1	**2117025**
DLC-1800	817	17,5	7	28,6	50	5.4:1	241,3	73	3,1	**2117029**
DL-2500AB	1.134	14,0	8	28,6	60	17.3:1 - 5.4:1	241,3	229	7,1	**2117007**
DL-3500B	1.134	12,3	10	28,6	60	17.3:1 - 5.4:1	241,3	229	10,0	**2117009**

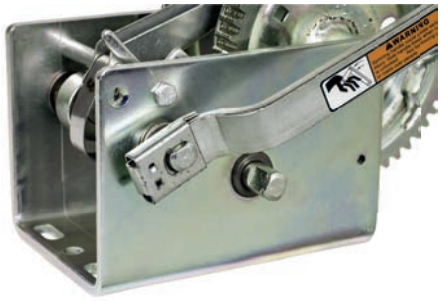

1



2



3

DLB self-braking hand winch



Important:
For lifting applications.

Always choose the correct rope diameter to ensure sufficient breaking-load capacity.

The DLB series is a zinc-plated manual hand winches equipped with an automatic load-pressure brake. It is designed for pulling and light lifting applications requiring load-holding capability.

Features
- Zinc-plated housing; DL-2500G supplied with black drum.
- Automatic load-pressure brake holds the load securely at any position.

Standard delivery
- Supplied without wire rope.

Options
- Wire rope set with hook (various diameters available)

DLB 350A/800AG/1200AG

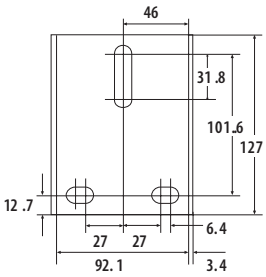

DLB 1500AG

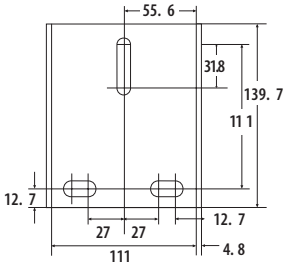

DLB 2000AG

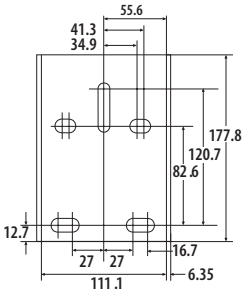

DLB 2500G

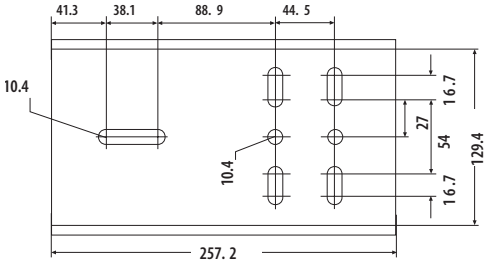

Type	WLL (kg)	Min. load (kg)	Max. rope length (m)	Rope diameter (mm)	Lift per rev. (mm)	Drum diameter (mm)	Drum width (mm)	Gear ratio	Handle length (mm)	Handle effort (kg)	Base plate (cm)	Weight (kg)	Article number
DLB-350A	159	23	25,0	3	22.5	26	52	3.2 :1	178	10	13 x 10	3,0	**2117010**
DLB-800AG	360	23	23,0	4	36	48	53	4.4 :1	178	12	13 x 10	3,0	**2117011**
DLB-1200AG	545	23	19,7	5	39	64	51	5.4 :1	238	19	13 x 10	4,0	**2117013**
DLB-1500AG	680	34	15,1	6	40	64	62	5.4:1	305	18	14 x 12	5,0	**2117015**
DLB-2000AG	905	89	8,9	7	30	64	54	17.3 :1	238	8	18 x 12	7,0	**2117016**
DLB-2500G	1.135	136	7,4	8	23	79	66	12.0 :1	244	13	26 x 14	12,0	**2117017**

Rema TWZ (zinc-plated) & TWR (stainless steel) self-braking hand winch



Compact Rema TWZ (zinc-plated) and TWR (stainless steel AISI 304) winches are made from pressed steel. These self-braking hand winches offer high rigidity and long service life and are widely used in food-processing, maritime, poultry and trailer-manufacturing industries.

Features

- Automatic load-pressure brake holds the load securely in any position.
- Double pawl safety system for extra security (for 820 kg and 1,200 kg models).
- Enclosed gear and brake system for reliable protection.
- Removable crank handle.
- Easy rope fastening.

Standard delivery

- Supplied without wire rope.

Options

- Wire rope set with safety hook according to DIN 3060 (see p. 83).

For lifting and pulling applications.

Always choose the correct rope diameter to ensure sufficient breaking-load capacity.

TWZ-800 - TWZ/TWR 1200

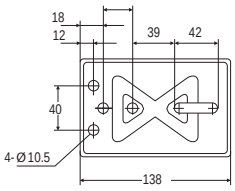

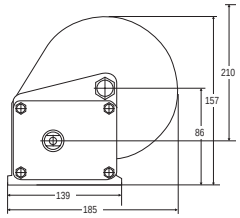

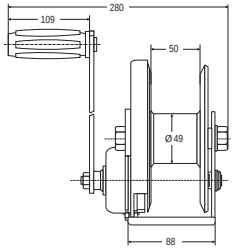

TWZ/TWR 1800

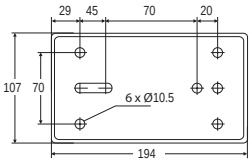

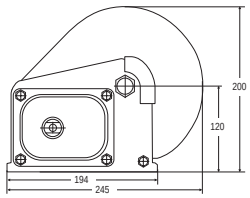

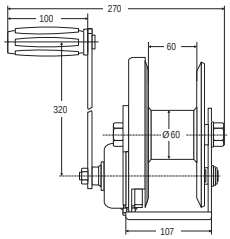

TWZ/TWR 2600

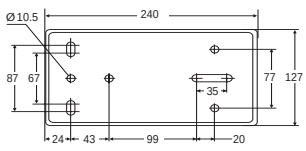

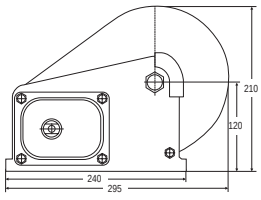

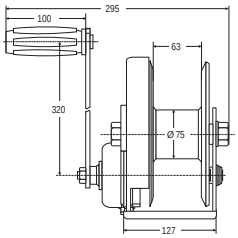

Type	WLL pulling (kg)	WLL lifting (mm)	Min. load (kg)	Max. rope length (m)	Rope diameter (mm)	Lift per rev. (mm)	Drum diameter (mm)	Drum width (mm)	Gear ratio	Handle length (mm)	Handle effort (kg)	Weight (kg)	Article number
TWZ-800	360	180	10	36	4	34	48	50	4.1 : 1	210	14.5	3,0	**2111001**
TWZ-1200	550	275	10	23	5	42	48	50	4.1 : 1	210	15	3,3	**2111003**
TWZ-1800	820	410	15	20	7	49	60	60	5.0 : 1	320	22	8,0	**2111005**
TWZ-2600	1.180	590	20	18	8	28	75	63	10.0 : 1	320	19	10,3	**2111007**
TWR-1200	440	220	10	23	5	42	48	50	4.1 : 1	210	15	3,3	**2112003**
TWR-1800	660	330	15	20	6	49	60	60	5.0 : 1	320	22	8,0	**2112005**
TWR-2600	960	480	20	18	8	28	75	63	10.0 : 1	320	19	10,3	**2112007**

Rema TL spur geared hand winch



For lifting and pulling applications.

Always choose the correct rope diameter to ensure sufficient breaking-load capacity.

The Rema TL spur gear hand winch is designed for reliable lifting and pulling operations. Built with a robust steel housing and a self-locking brake system, this winch ensures safe and controlled load handling in industrial environments.

Features

- Equipped with automatic load pressure brake.
- Adjustable, non-reversing crank handle.
- Drum and shafts mounted on needle bearings.
- Durable powder-coated finish.
- Minimum load requirement: 20%.

Standard delivery

- Supplied without wire rope.

Options

- Wire rope available on request.
- ATEX version available for use in explosive atmospheres.

TL-150

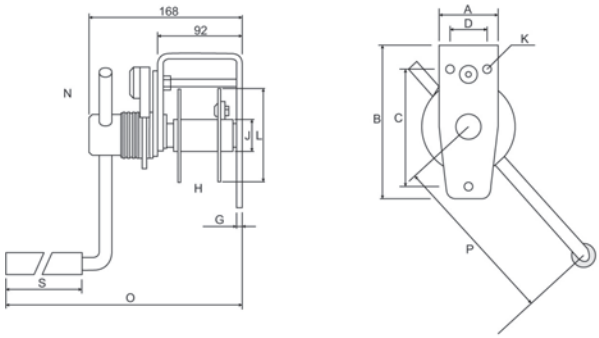

TL-1000 / TL-1500

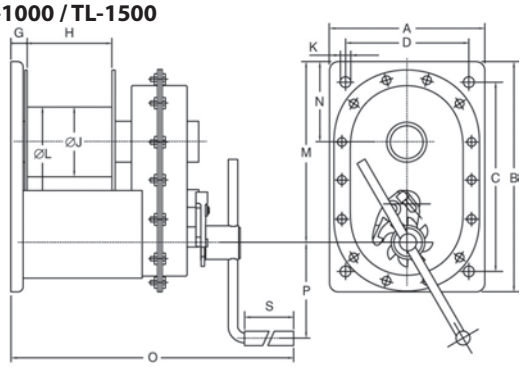

TL-300 / TL-600

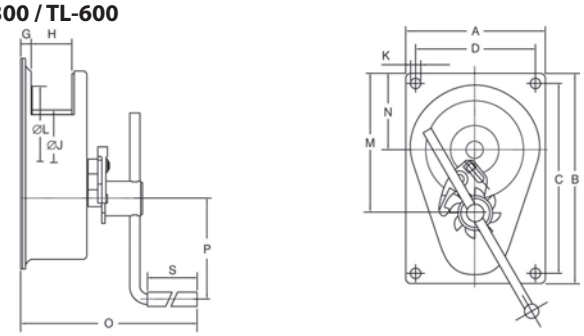

Type	WLL 1st layer (kg)	WLL last layer (kg)	Cable max. (m)	Rope diameter (mm)	Lift per rev. (mm)	Handle effort (kg)	Weight (kg)	Article number
TL-0.150	150	68	13	4	122	11	4,0	**2015008**
TL-0.3	300	120	25	5	21	7	10,0	**2015009**
TL-0.6	600	323	12	6	28	10	11,0	**2015012**
TL-1.0	1.000	684	28	10	21	15	28,0	**2015013**
TL-1.5	1.500	844	21	14	14	12	27,5	**2015014**

Type	A (mm)	B (mm)	C (mm)	D (mm)	G (mm)	H (mm)	J (mm)	K (mm)	L (mm)	M (mm)	N (mm)	O (mm)	P (mm)	S (mm)
TL-0.150	65	168	128	40	6,0	40,5	35	9,0 (3x)	102	-	89	303,0	280	128,5
TL-0.3	200	300	268	168	20,0	55,0	70	12,0 (4x)	145	198	108	318,0	280	128,5
TL-0.6	200	300	268	168	20,0	55,0	60	12,0 (4x)	145	203	110	318,0	325	128,5
TL-1.0	250	250	212	170	6,7	113,0	102	16,5 (4x)	212	266	118	483,5	350	132,2
TL-1.5	250	250	212	170	22,5	113,0	102	17,0 (4x)	212	266	118	483,5	350	128,5

Rema RGL geared hand winch with freewheel system



For lifting and pulling applications.

Always choose the correct rope diameter to ensure sufficient breaking-load capacity.

The Rema RGL spur gear winch is a robust and versatile hand winch equipped with a double pawl braking system and freewheel mechanism. Designed for safe and efficient lifting and pulling operations in demanding industrial environments.

Features

- Fitted with automatic load pressure brake and double pawl system for maximum safety.
- Adjustable crank handle length.
- Drum and shafts mounted on bearings.
- Freewheel function with protected pawl system.
- Durable powder-coated finish (RAL 2004).

Standard delivery

- Supplied without wire rope.

Options

- Wire rope available on request.

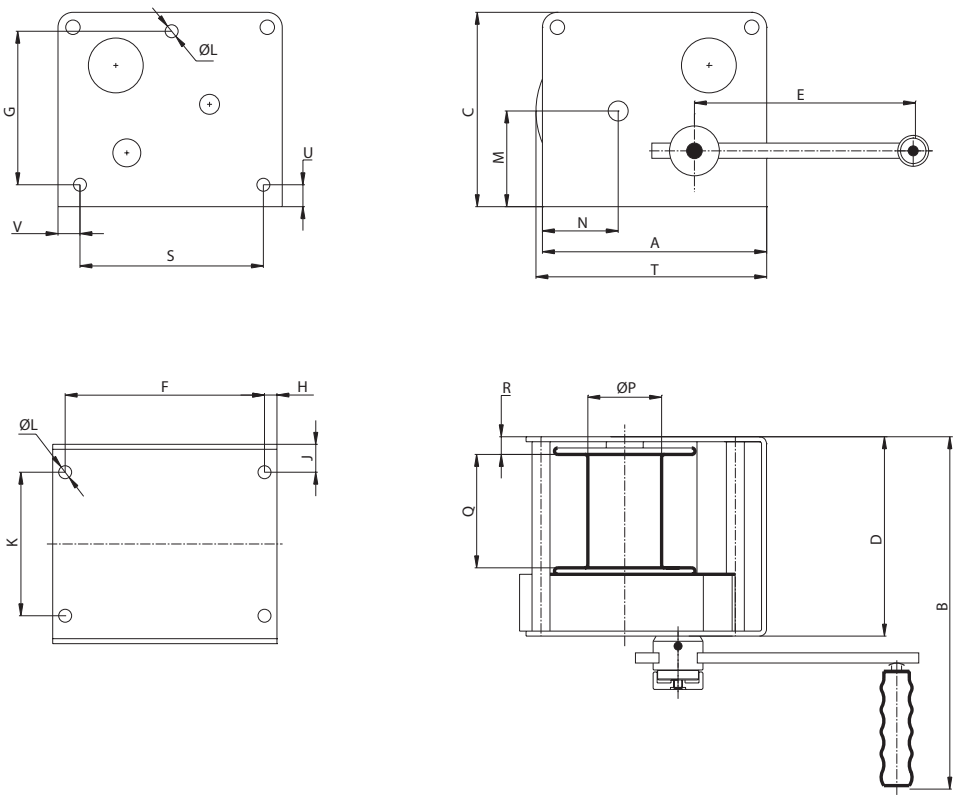

Type	WLL 1st layer (kg)	WLL last layer (kg)	Handle length (mm)	Cable max. (m)	Rope diameter (mm)	Gear ratio	Weight (kg)	Article number
RGL-150	150	45	250/100	22	4	2.84 :1	9,2	**2017001**
RGL-300	300	100	250/100	30	5	6.67:1	16,5	**2017003**
RGL-500	500	300	250/100	30	6	7.75 :1	18,5	**2017005**

Type	A (mm)	B (mm)	C (mm)	D (mm)	F (mm)	G (mm)	H (mm)	J (mm)	K (mm)	L (mm)	M (mm)	N (mm)	P (mm)	Q (mm)	R (mm)	S (mm)	T (mm)	U (mm)	V (mm)
RGL-150	180	324	150	150	154	102	13,0	18	114	7x9	70,0	66,4	55	77,3	18,0	132	177	18,0	24
RGL-300	225	390	195	200	200	154	12,5	28	144	13	96,0	76,0	62	107,0	25,0	184	235	22,5	20
RGL-500	242	380	200	200	200	154	21,0	28	144	7x13	102,7	83,0	74	107,0	24,5	184	251	22,0	29

Rema AW wall-mounted hand winch



The Rema AW wall-mounted hand winch is a compact and durable self-braking winch designed for lifting and holding light loads. Ideal for applications such as shutters, blinds, and light lifting installations where safety and reliability are required.

Features
- Capacities of 45 kg and 100 kg.
- Maximum cable storage length: 8 m.
- Recommended cable diameter: 3 mm.
- Supplied with detachable crank handle.
- Automatic load pressure brake holds the load securely in any position.

Standard delivery
- Supplied without wire rope.

Options
- Wire rope available on request.

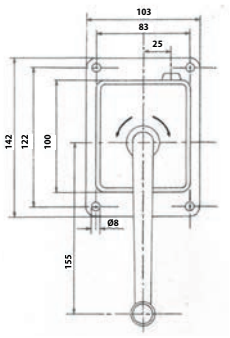

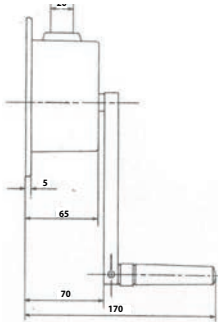

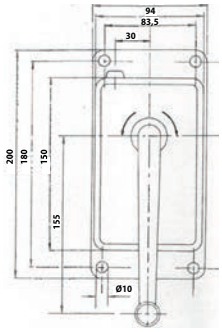

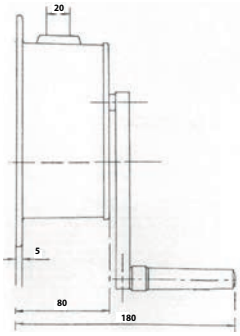

Type	Capacity (kg)	Housing dimensions (mm)	Base plate dimensions (mm)	Net Weight (kg)	Article number
AW-45	45	84 x 99 x 59	142 x 114	0,96	**2014001**
AW-100	100	95 x 155 x 82	103 x 198	1,9	**2014003**

Rema Pulleyman winch



The winch is not suitable for use with impact drivers or hammer drills.

The innovative Rema Pulleyman winch combines compact design with powerful performance. Driven by a cordless drill, it offers fast and efficient lifting of loads, making it ideal for installation, assembly, and maintenance tasks. The 360° rotatable housing provides excellent maneuverability in confined spaces.

Features
- Lifting capacities: 300 kg or 600 kg.
- Operated by a cordless drill (not included).
- 360° rotatable for flexible handling.
- Equipped with a 12 m wire rope on a synthetic drum.
- Fitted with a patented reduction brake for maximum safety.

Standard delivery
- Supplied without cordless drill.

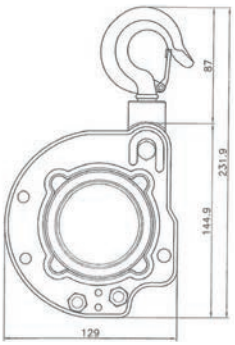

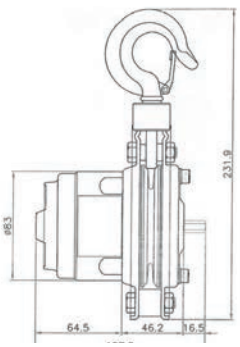

Type	WLL (kg)	Number of falls	Max. speed, unloaded (m/min)	Max. speed, loaded (m/min)	Rope diameter (mm)	Lifting height (m)	Weight incl. wire rope (kg)	Article number
PM-300	300	1	6	3,75	4,76	12	5,0	**2390001**
PM-600	600	2	3	1,80	4,76	6	6,0	**2390003**

Rema stainless steel cable set



The Rema stainless steel cable set is manufactured from high-grade AISI 316 stainless steel, offering excellent corrosion resistance. Designed for use in demanding environments such as marine, offshore, or food industry applications.

Standard delivery
- Complete stainless steel cable set with hook.

Options
- Longer cable lengths and higher working loads available on request.

For aggressive or corrosive environments

Type	WLL (kg)	Cable length (m)	Rope diameter (mm)	Weight (kg)	Article number
5MM-20M-238KG-PH	238	20	5	1,0	**2220520**
6MM-20M-343KG-PH	343	20	6	1,0	**2220620**
8MM-10M-610KG-PH	610	10	8	1,0	**2220810**
8MM-15M-610KG-PH	610	15	8	1,0	**2220815**

Rema winch strap set



The Rema winch strap set is manufactured in accordance with EN 1492-1 and equipped with a latch hook on one end and a sewn loop on the other. Designed for pulling and securing applications.

Standard delivery
- Complete strap set including hook and loop.

Options
- Longer strap lengths available on request.

Not suitable for lifting applications

Type	For winch type	Weight (kg)	Article number
50mm x 4,5m	DL1100/DLB800/DL1402	0,60	**2222001**
50mm x 7,5m	DL1100/DL1402	0,75	**2222003**

Rema RWL worm gear winch with freewheel system



The Rema RWL worm gear winch is a heavy-duty and reliable winch, designed with an integrated freewheel system for fast cable deployment.

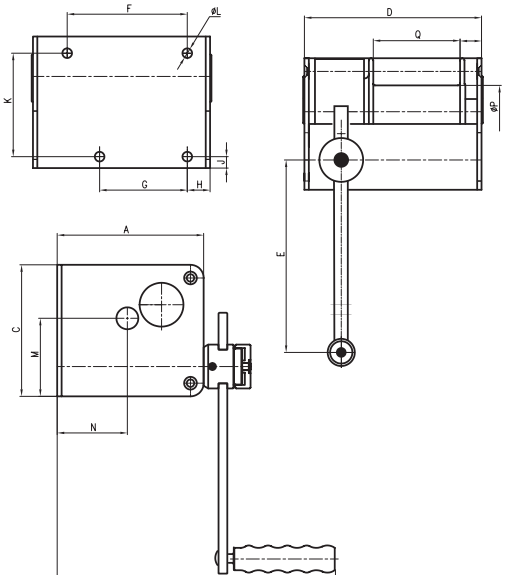

Features
- Brake-equipped design incl. double pawl system.
- Adjustable crank handle length.
- Drum and shafts mounted on bearings.
- Freewheel function via enclosed pawl system.
- Durable powder-coated finish (RAL 2004).

Options
- Wire rope available on request.

Standard delivery
- Delivered without wire rope.

Important: Always specify required rope length and rope diameter when ordering.

Type	WLL 1st layer (kg)	WLL last layer (kg)	Handle length (mm)	Cable max. (m)	Rope diameter (mm)	Gear ratio	Weight (kg)	Article number
RWL-250	250	75	250/100	20	5	15:1	11,0	**2018001**
RWL-500	500	300	250/100	30	6	24:1	17,0	**2018003**
RWL-1000	1.000	550	350/100	35	10	26:1	36,0	**2018005**

Type	A (mm)	B (mm)	C (mm)	D (mm)	F (mm)	G (mm)	H (mm)	J (mm)	K (mm)	L (mm)	M (mm)	N (mm)	Q (mm)	P (mm)
RWL-250	167	332	150	202	137	100	26	13	118	11	89,0	80	99	24,5
RWL-500	195	367	190	260	182	132	33	18	142	13	111,5	94	146	32,0
RWL-1000	295	490	300	300	167	167	32	21	250	17	180,5	136	158	33,0

Rema WW worm gear winch



Important:
Always specify required rope length and rope diameter when ordering.

The Rema WW worm gear winch is designed for reliable performance in heavy-duty industrial applications. With a robust worm gear transmission and advanced safety features, this winch ensures precise and secure load handling, even under demanding conditions.

Features

- Adjustable crank handle length, backlash-free operation.
- Drum and shafts fitted with needle bearings for smooth running.
- Models from 2,000 kg upwards feature a second lifting speed (by repositioning the crank).
- Standard painted and baked finish for durability.

Options

- Electro-galvanized version.
- Freewheel option (for models ≥ 2,000 kg).
- Partition wall for dual rope winding.
- Foldable crank handle.
- Grooved drum.
- Narrow drum option.
- Wire rope available on request.

Standard delivery

- Delivered without wire rope.

WW-250 / WW-1500

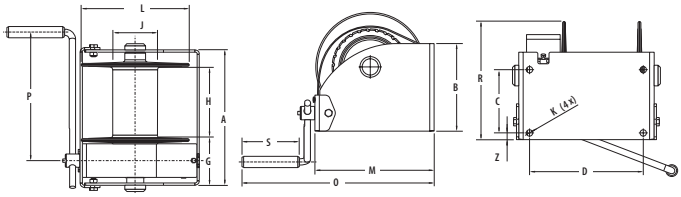

WW-2000 / WW-5000

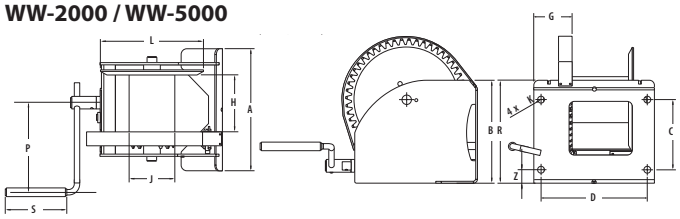

Type	WLL 1st layer (kg)	WLL last layer (kg)	Cable max. (m)	Rope diameter (mm)	Lift per rev. (mm)	Handle effort (kg)	Weight (kg)	Article number
WW-250	250	95	104	4	17	3,5	13,0	**2016001**
WW-500	500	239	78	6	20	9,0	16,0	**2016003**
WW-1000	1.000	542	63	8	13	15,5	26,0	**2016005**
WW-1500	1.500	845	41	10	9	19,0	28,0	**2016007**
WW-2000	2.000	1129	46	12	12/6	22,0/13,0	60,0	**2016009**
WW-3000	3.000	1861	52	14	11/6	27,0/14,0	78,0	**2016011**
WW-4000	4.000	2390	52	16	11/4	35,0/13,0	80,0	**2016012**
WW-5000	5.000	3165	40	18	12/4	58,0/17,0	115,0	**2016013**

Type	A (mm)	B (mm)	C (mm)	D (mm)	G (mm)	H (mm)	J (mm)	K (mm)	L (mm)	M (mm)	N (mm)	O (mm)	P (mm)	R (mm)	S (mm)
WW-250	238	145	100	192	106	102	48	14	160	191	15	410	280	171	130
WW-500	269	160	115	223	107	131	70	14	190	221	15	440	325	192	130
WW-1000	302	195	141	254	110	160	102	14	240	266	15	490	350	264	130
WW-1500	302	250	178	254	111	160	102	14	240	278	15	490	350	306	130
WW-2000	410	310	196	360	137	176	133	25	312	382	45	724	380	421	220
WW-3000	436	365	251	386	137	176	165	25	376	442	47	784	380	523	220
WW-4000	436	365	251	386	137	174	165	25	376	442	47	784	380	523	220
WW-5000	436	425	316	386	137	200	219	25	437	494	38	836	380	599	220

Rema wire rope set



Not suitable for lifting unless correct rope diameter and load rating are matched to the winch.

The Rema wire rope set is designed according to DIN 3060 and supplied complete with safety hook and timble. It is the ideal complement to Rema hand and worm gear winches, ensuring safe and reliable operation.

Options

- Longer rope lengths.
- Higher working loads.

Type	WLL (kg)	Cable length (m)	Tensile strength (N/mm^2)	Rope diameter (mm)	Weight (kg)	Article number
4MM-20M-DIN3060	210	20	1770	4	1,55	**2221004**
5MM-15M-DIN3060	320	15	1770	5	1,75	**2221005**
6MM-15M-DIN3060	470	15	1770	6	2,50	**2221006**
7MM-10M-DIN3060	640	10	1770	7	2,30	**2221007**
8MM-8M-DIN3060	840	8	1770	8	2,45	**2221008**
10MM-10M-DIN3060	1.060	10	1770	10	3,50	**2221010**

Rema RSL scaffolding hoist



The Rema RSL scaffolding hoist is a powerful single-phase (230 V) hoist, available in lifting capacities of 150, 200 or 300 kg. All models are supplied with a lifting height of 30 m. The hoist is designed for fast and easy installation, either on a dedicated stand or directly onto a support arm attached on scaffolding tube Ø 48.3mm with a clamp set.

Features
- Lifting capacities: 150, 200 and 300 kg.
- Operating voltage: 230 V, 1 Ph.
- Standard lifting height: 30 m.
- Upper limit switch included.
- Control cable length: 1 m.

Standard delivery
- Hoist unit (no accessories).

Options
- Scaffold stand.
- Support arm.
- Mounting bracket.
- Clamping set.

Type	WLL 3rd layer (kg)	Rope diameter (mm)	Speed 1st layer (m/min)	Width (mm)	Power (kW)	Weight (kg)	Article number
RSL-150	150	5	20,0	163	0,85	19,9	**2386001**
RSL-200	200	5	20,0	190	0,85	26,0	**2386003**
RSL-300	300	5	20,0	236	1,1	43,0	**2386005**

Rema RSL accessories



Stand



Support arm



Clamping set



Bracket

Type	WLL (kg)	Scaffold tube diameter (mm)	Article number
Stand 195-300 cm - all capacities	150, 200, 300	-	**2386007**
Stand 101-145 cm - all capacities	150, 200, 300	-	**2386009**
Support arm RSL-150	150	-	**2386011**
Support arm RSL-200	200	-	**2386013**
Support arm RSL-300	300	-	**2386015**
Clamping set RSL-150/200	150/200	48,3	**2386017**
Bracket RSL-300	300	48,3	**2386019**

EHL electric winch



Important:
For lifting capacities above 1,000 kg, overload protection is mandatory.

The EHL series of electric hoisting winches is engineered in accordance with the latest version of EN 14492 (duty class K3). In several European countries, use of a load limiter and/or limit switch is mandatory. With a robust design and high lifting capacities, the EHL hoist is suitable for a wide range of industrial applications.

Features
- Lifting capacities from 200 up to 1,700 kg.
- Double-supported cable drum (from model EHL-580).
- Steel foundation plate (from model EHL-580).
- Grooved drum (from model EHL-580).
- Enlarged drum diameter.
- Maximum 3 layers of wire rope on the drum.

Motor specifications
- Operating voltage: 400 V, three-phase, 50 Hz.
- Insulation class: F.
- Motor protection class: IP56.
- Brake protection class: IP55.

Standard delivery
- Painted in orange (RAL 2004).
- Supplied without control unit and wire rope.
- Supplied without overload protection.

Options
- Wire rope available on request.
- Alternative drum speeds and diameters.
- Infinitely variable speed control via frequency converter.
- Split drum.
- Spindle band brake on drum.
- Hydraulic or pneumatic drive.
- 230 V version up to max. 750 kg.
- Special coating/final colour (RAL 2004).
- Slack rope device.
- Second shaft end with hand crank (e.g. manual operation).
- Standstill heating.
- Drum with Lebus-patent groove.
- Marine execution.

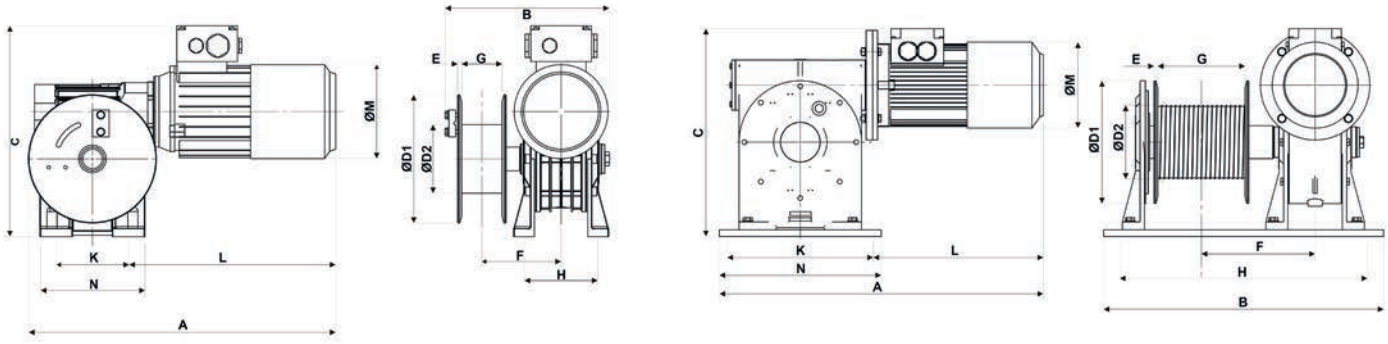

Type	WLL 3rd layer (kg)	Rope diameter (mm)	Speed 1st layer (m/min)	Drum capacity 1st layer (m)	Drum capacity 3rd layer (m)	Power (kW)	Weight (kg)	Article number
EHL-200	200	5	5,8	3,5	12	0.55	24,0	**2300027**
EHL-450	450	6	7,0	3,5	12	1.10	40,0	**2300029**
EHL-580	580	7	5,7	8,0	25	1.10	95,0	**2300031**
EHL-800	800	8	6,5	8,0	25	1.50	98,0	**2300033**
EHL-1050	1.050	10	7,9	10,0	35	3.00	150,0	**2300035**
EHL-1325	1.325	11	9,3	13,5	45	4.00	209,0	**2300037**
EHL-1700	1.700	12	9,7	15,5	50	5.50	315,0	**2300039**

Type	A (mm)	B (mm)	C (mm)	D1 (mm)	D2 (mm)	E (mm)	F (mm)	G (mm)	H (mm)	K (mm)	L (mm)	M (mm)	N (mm)
EHL-200	457	284,6	306,6	190	101,6	6	117	60	114	120	302	139	158
EHL-450	516	297,0	348,0	187	121,0	6	123	60	138	140	335	156	193
EHL-580	653	540,0	436,0	250	121,0	6	213	150	500	275	262	157	325
EHL-800	653	540,0	436,0	250	139,0	6	215	150	500	275	282	158	325
EHL-1050	738	640,0	474,0	280	168,0	8	262	200	600	320	307	190	370
EHL-1325	852	710,0	537,0	320	195,0	8	300	250	670	360	307	190	410
EHL-1700	976	850,0	629,0	370	205,0	8	333	300	800	380	324	216	440

EWL electric worm gear winch



The EWL electric worm gear winch combines a favourable price-to-performance ratio with reliable design. This winch can be supplied in compliance with various classifications and certifications, making it suitable for a wide range of industrial and marine applications where pulling or positioning of loads is required.

Features
- Pulling capacities from 250 up to 2,800 kg.
- Double-supported cable drum (from model EWL-1000).
- Steel foundation plate (from model EWL-1000).

Standard delivery
- Painted in orange (RAL 2004).
- Supplied without control unit and wire rope.
- Supplied without overload limiter (mandatory above 1,000 kg).

Important:
Not suitable for lifting.

Options
- Wire rope.
- Control cable and switch box.
- Overload limiter (mandatory above 1,000 kg).
- Marine execution.

EWL 250 / 750

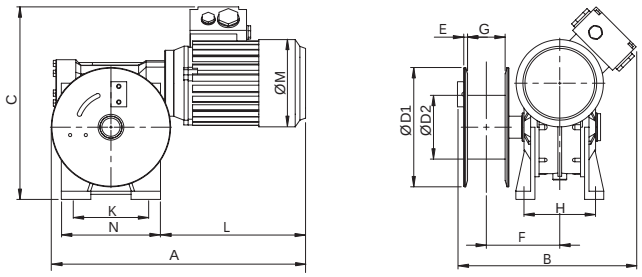

EWL 1000 / 2800

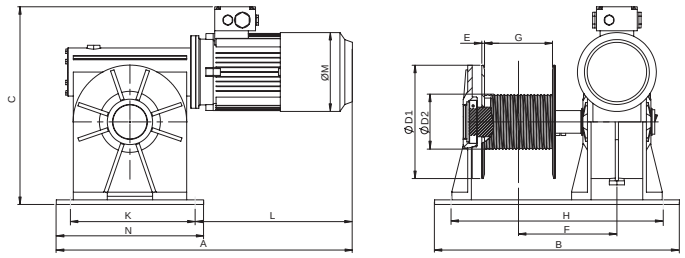

Type	Pulling force 1st layer (kg)	Pulling force 3rd layer (kg)	Rope diameter (mm)	Speed 1st layer (m/min)	Drum capacity 1st layer (m)	Drum capacity 5th layer (m)	Power S2 (kW)	Weight (kg)	Article number
EWL-250	250	200	6	8,4	3,3	20	0.55	21,0	**2300001**
EWL-500	500	400	6	8,4	3,3	20	1.10	36,0	**2300003**
EWL-750	750	600	6	5,8	3,3	20	1.10	36,0	**2300005**
EWL-1000	1.000	770	8	6,0	6,1	40	1.50	90,0	**2300007**
EWL-1250	1.250	965	8	6,0	6,1	40	2.20	93,0	**2300009**
EWL-1750	1.750	1.340	10	5,8	8,2	53	3.00	136,0	**2300011**
EWL-2250	2.250	1.725	12	7,0	10,0	65	4.00	192,0	**2300013**
EWL-2800	2.800	2.115	14	7,8	11,6	75	5.50	302,0	**2300015**

Type	A (mm)	B (mm)	C (mm)	D1 (mm)	D2 (mm)	E (mm)	F (mm)	G (mm)	H (mm)	K (mm)	L (mm)	M (mm)	N (mm)
EWL-250	405	284,6	306,6	190	101,6	6	117	60	114	120	250	139	158
EWL-500	460	299,0	348,0	190	106,6	6	125	60	138	140	279	156	193
EWL-750	460	299,0	348,0	190	106,6	6	125	60	138	140	279	156	193
EWL-1000	589	540,0	436,0	250	101,6	6	215	150	500	275	264	130	325
EWL-1250	589	540,0	436,0	250	101,6	6	215	150	500	275	282	158	325
EWL-1750	660	640,0	474,0	280	121,0	8	262	200	600	320	307	190	370
EWL-2250	706	710,0	524,0	320	146,0	8	300	250	670	360	307	190	410
EWL-2800	825	850,0	607,0	370	159,0	8	333	300	800	380	324	216	440

Accessories for electric winches

Accessories are an essential part of the safe and efficient operation of our winches and hoisting systems. The correct use of cables, hooks, sheaves, and related components not only enhances performance but also ensures reliability, durability and safety.

Our specialists are available to advise you in selecting the right accessories tailored to your specific application and working conditions.



Control box IP54



Spindle limit switch

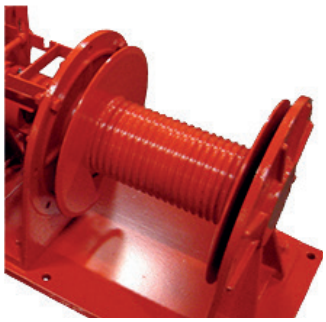

Grooved drum

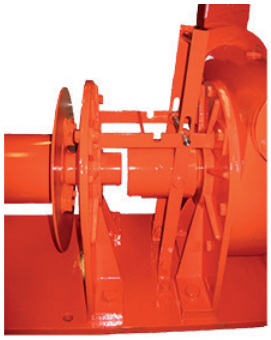

Freewheel clutch

Type	For winch type	Article number
Control box	EWL-250 to EWL-2250	**2300041**
Control box	EHL-200 to EHL-1325	**2300043**
Control box	EWL-2800	**2300045**
Control box	EHL-1700	**2300047**
Control box with 5 m control cable	EWL-250 to EWL-2250	**2300051**
Control box with 5 m control cable	EHL-200 to EHL-1050	**2300053**
Control box with 5 m control cable	EWL-2800	**2300055**
Control box with 5 m control cable	EHL-1325 / EHL-1700	**2300057**
Spindle limit switch	All types, mounted on winch	**2300059**
Control box mounted on winch	From EHL-580 / EWL-1000	**2300061**
Load limiter (control box not included)	All types	**2300049**
Pressure roller	EWL-250/500, EHL-200/450	**2300063**
Pressure roller	EWL-1000/1250, EHL-580/800	**2300065**
Pressure roller	EWL-1750/2800, EHL-1050/1700	**2300067**
Grooved drum	EWL-250/750, EHL-200/450	**2300069**
Grooved drum	EWL-1000/1250	**2300071**
Grooved drum	EWL-1750	**2300073**
Grooved drum	EWL-2250	**2300075**
Grooved drum	EWL-2800	**2300077**
Marine version	EWL-500/1250	**2300079**
Marine version	EWL-1750/2250	**2300081**
Marine version	EWL-2800	**2300083**
Extended drum +50 mm	EWL-1000/1250	**2300085**
Extended drum +50 mm	EWL-1750	**2300087**
Extended drum +50 mm	EWL-2250	**2300089**
Extended drum +50 mm	EWL-2800	**2300091**

☑ Checklist for specifying an electric winch

Use this checklist when specifying or requesting an electric winch:

- ☐ **Intended use (pulling, hoisting or both).**
- ☐ **Pulling capacity / which layer?**
- ☐ **Working length of the rope and number of layers.**
- ☐ **Speed / variable control? yes/no.**
- ☐ **Available electric power: voltage and current.**
- ☐ **Pneumatic: flow and pressure.**
- ☐ **Hydraulic: flow and pressure.**
- ☐ **Braking force.**
- ☐ **Freewheel clutch required or permitted.**
- ☐ **Max. weight or installation dimensions.**
- ☐ **Finish, dust and water protection.**
- ☐ **Inspection / certification standards.**
- ☐ **Control requirements / operation.**
- ☐ **Rope payout direction.**
- ☐ **Drum grooved.**
- ☐ **Mounting position.**

CP pulling winch 230 VAC



The CP pulling winch (230 V) is a robust and reliable planetary gear winch, designed for industrial pulling applications where safety and durability are essential. Supplied complete with steel wire rope and hook.

Features

- Supplied with control cable + push-button pendant including emergency stop (IP65).
- Electromagnetic brake.
- Bearing-mounted construction.
- Supplied with wire rope + hook.
- Planetary gear transmission.

Technical specifications

- CP-300 Motor: IP44, 4-pole, 1.15 kW.
- CP-500 Motor: IP44, 4-pole, 1.8 kW.
- Power supply: 230 VAC, single-phase, 50 Hz.

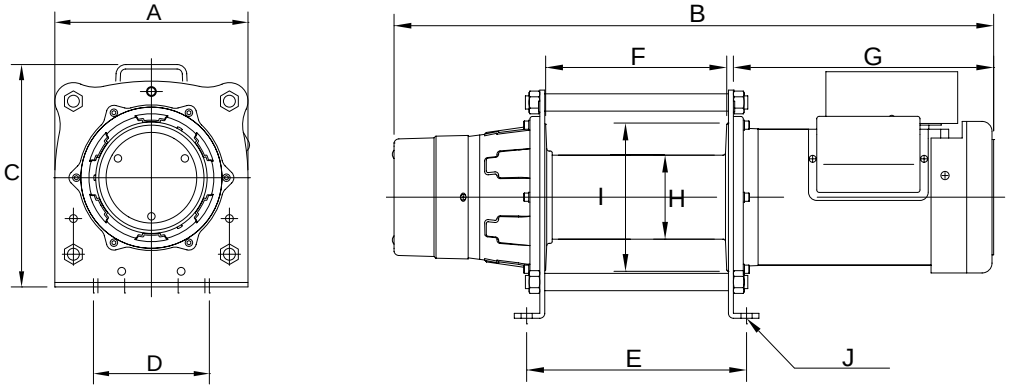

Type	WLL (kg)	Max. pulling force on drum (kg)	Lifting speed 1st layer (m/min)	Cable length (m)	Rope diameter (mm)	Dimensions L x W x H (mm)	Drum width (mm)	Drum diameter (mm)	Weight (kg)	Article number
CP-300	300	600	10	30	6	565 x 210 x 241	110	94	38,0	**2382007**
CP-500	500	1.000	10	60	7	694 x 260 x 299	220	102	55,0	**2382009**

Type	A (mm)	B (mm)	C (mm)	D (mm)	E (mm)	F (mm)	G (mm)	H (mm)	I (mm)	J (mm)
CP-300	210	565	241	142	142	110	280	94	154	6,0 x 10,5
CP-500	260	728	299	156	267	220	316	102	180	6,0 x 13,5

CP-T pulling winch 400 VAC



The CP-T pulling winch (400 V) is a heavy-duty version, built with the same reliable planetary gear design but suited for three-phase industrial environments, ensuring higher power and efficiency.

Features

- Supplied with control cable + push-button pendant including emergency stop (IP65).
- Electromagnetic brake.
- Bearing-mounted construction.
- Supplied with wire rope + hook.
- Planetary gear transmission.

Standard delivery

- CP-T 1000 Motor: IP54, 4-pole, 2.2 kW.
- CP-T 1500 Motor: IP54, 4-pole, 3.0 kW.
- Power supply: 400 VAC, three-phase, 50 Hz.

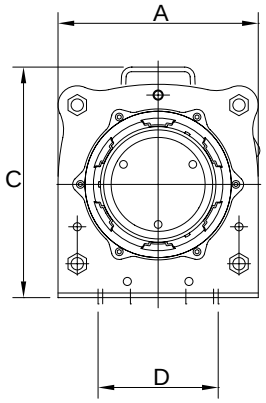

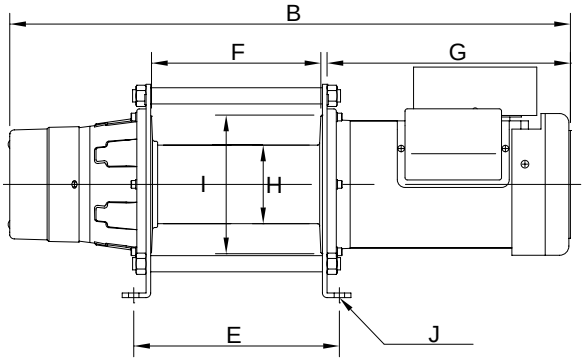

Type	WLL (kg)	Max. pulling force on drum (kg)	Lifting speed 1st layer (m/min)	Cable length (m)	Rope diameter (mm)	Dimensions L x W x H (mm)	Drum width (mm)	Drum diameter (mm)	Weight (kg)	Article number
CP-T500	500	1.000	10	60	7	694 x 260 x 299	220	102	55,0	**2382109**

Type	A (mm)	B (mm)	C (mm)	D (mm)	E (mm)	F (mm)	G (mm)	H (mm)	I (mm)	J (mm)
CP-T500	260	728	299	156	267	220	316	102	180	6,0 x 13,5

RZ steel wire pulley



Maintenance-free loose pulley for steel wire rope, suitable for both manual and mechanically driven winches; made entirely of steel with self-lubricating plain bearings.

Features
- Suitable for hand and mechanical applications.
- Maintenance-free design.
- Steel construction.
- Self-lubricating plain bearings.

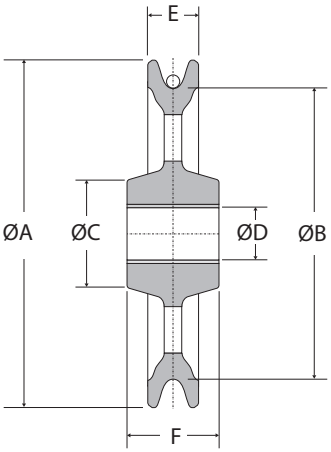

Type	WLL hand operated (kg)	WLL mechanically driven (kg)	Rope diameter (mm)	A (mm)	B (mm)	C (mm)	D (mm)	E (mm)	F (mm)	Article number
RZ-0.5	500	250	5 - 6	150	125	46	22	22	40	**3063001**
RZ-1.0	1.000	500	8 - 10	235	200	78	40	32	50	**3063003**
RZ-2.0	2.000	1.000	12 - 14	325	280	108	60	41	70	**3063005**
RZ-3.0	3.000	1.500	16 - 18	400	340	110	70	51	87	**3063007**

RBZ pulley with fixed support



Guide roller with a fixed steel supportbracket for smooth steel wire rope guidance; suitable for both manual and mechanical winches. Its steel bracket incorporates a cable guide, and the sheave dimensions correspond to RZ-0.5 up to RZ-5.0.

Features
- Suitable for hand and mechanical applications.
- Maintenance-free design.
- Sheave dimensions correspond to RZ-0.5 to RZ-5.0.
- Steel bracket and steel sheave.
- Bracket equipped with cable guide.
- Self-lubricating plain bearings.

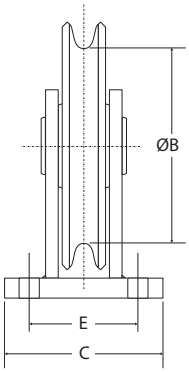

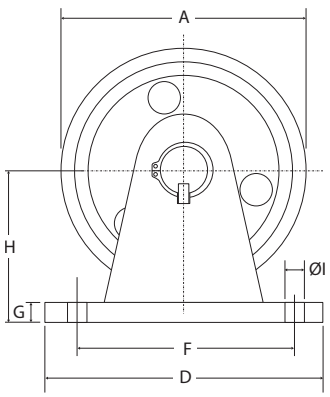

Type	WLL (kg)	Rope diameter (mm)	A (mm)	B (mm)	C (mm)	D (mm)	E (mm)	F (mm)	G (mm)	H (mm)	I (mm)	Weight (kg)	Article number
RBZ-0.5	500	5 - 6	150	125	82	115	55	88	15	92	11.5	3,25	**3064001**
RBZ-1.0	1.000	8 - 10	235	200	108	187	70	150	20	138	18	10,60	**3064003**
RBZ-2.0	2.000	12 - 14	325	280	143	260	95	212	25	190	23	31,00	**3064005**
RBZ-3.0	3.000	16 - 18	400	340	188	330	130	242	30	236	28	52,00	**3064007**

SKW wire rope footblock with swivel hook



Footblock can be opened for steel wire rope systems, fitted with a swivel hook to reroute wire ropes safely in lifting or pulling applications.

Features

- Equipped with swivel hook.
- Steel housing can be opened.

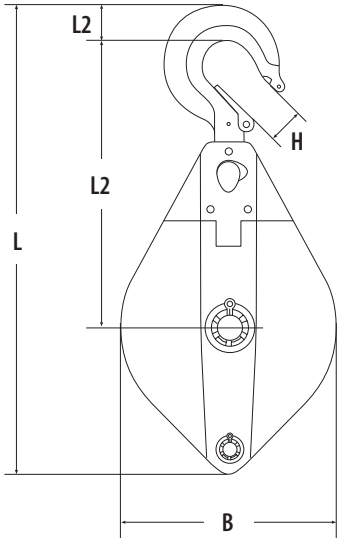

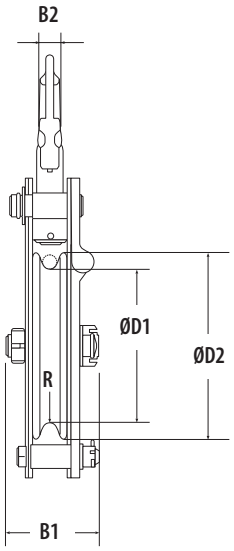

Type	WLL (kg)	Rope diameter (mm)	B (mm)	B1 (mm)	B2 (mm)	D1 (mm)	D2 (mm)	H (mm)	L (mm)	L1 (mm)	L2 (mm)	R (mm)	Weight (kg)	Article number
SKW-10	1.000	7	118	76	17	85	105	23	305	200	23	4	3,3	**3060001**
SKW-20	2.000	13	199	92	24	150	190	27	425	263	30	7	8,9	**3060003**
SKW-32	3.200	15	230	108	28	180	220	21	496	295	40	9	15,5	**3060005**
SKW-64	6.400	18	270	116	35	210	260	42	655	375	47	10	26,5	**3060007**

KBH footblock with 1 pulley (KBH1)



Steel wire rope footblock with one pulley and swivel hook, offering a safe working load from 500 kg up to 2,000 kg.

Features

- Equipped with swivel hook.
- Steel housing can be opened.

Type	WLL (kg)	Rope diameter (mm)	Thickness (mm)	Width (mm)	Height (mm)	H (mm)	Sheave diameter (mm)	Weight (kg)	Article number
KBH1-05	500	8	50	87	268	17	75	1,5	**3061001**
KBH1-10	1.000	10	56	112	312	17	100	2,6	**3061003**
KBH1-15	1.500	13	64	140	370	22	125	4,8	**3061005**
KBH1-20	2.000	16	101	168	443	31	150	7,4	**3061007**

KBH footblock with 2 pulleys (KBH2)



Steel wire rope footblock with two pulleys and swivel hook, rated for safe working loads from 500 kg to 2,000 kg

Features

- Equipped with swivel hook.
- Steel housing can be opened.

Type	WLL (kg)	Rope diameter (mm)	Thickness (mm)	Width (mm)	Height (mm)	H (mm)	I (mm)	Sheave diameter (mm)	Weight (kg)	Article number
KBH2-05	500	8	77	87	268	17	21	75	2,8	**3062001**
KBH2-10	1.000	10	88	112	312	17	21	100	4,3	**3062003**
KBH2-15	1.500	13	100	140	370	22	28	125	7,8	**3062005**
KBH2-20	2.000	16	146	168	443	31	28	150	12,2	**3062007**

5

Introduction	94
Vertical plate lifting clamps	95
Horizontal plate lifting clamps	103
Screw clamps	107
Beam clamps	110
Bulb and sheet pile clamps	115
Rail clamps	117
Pipe and block clamps	119
Concrete handling	121
Lifting magnets	123
Vacuuum lifters	130
Spreader beams / traverse	134

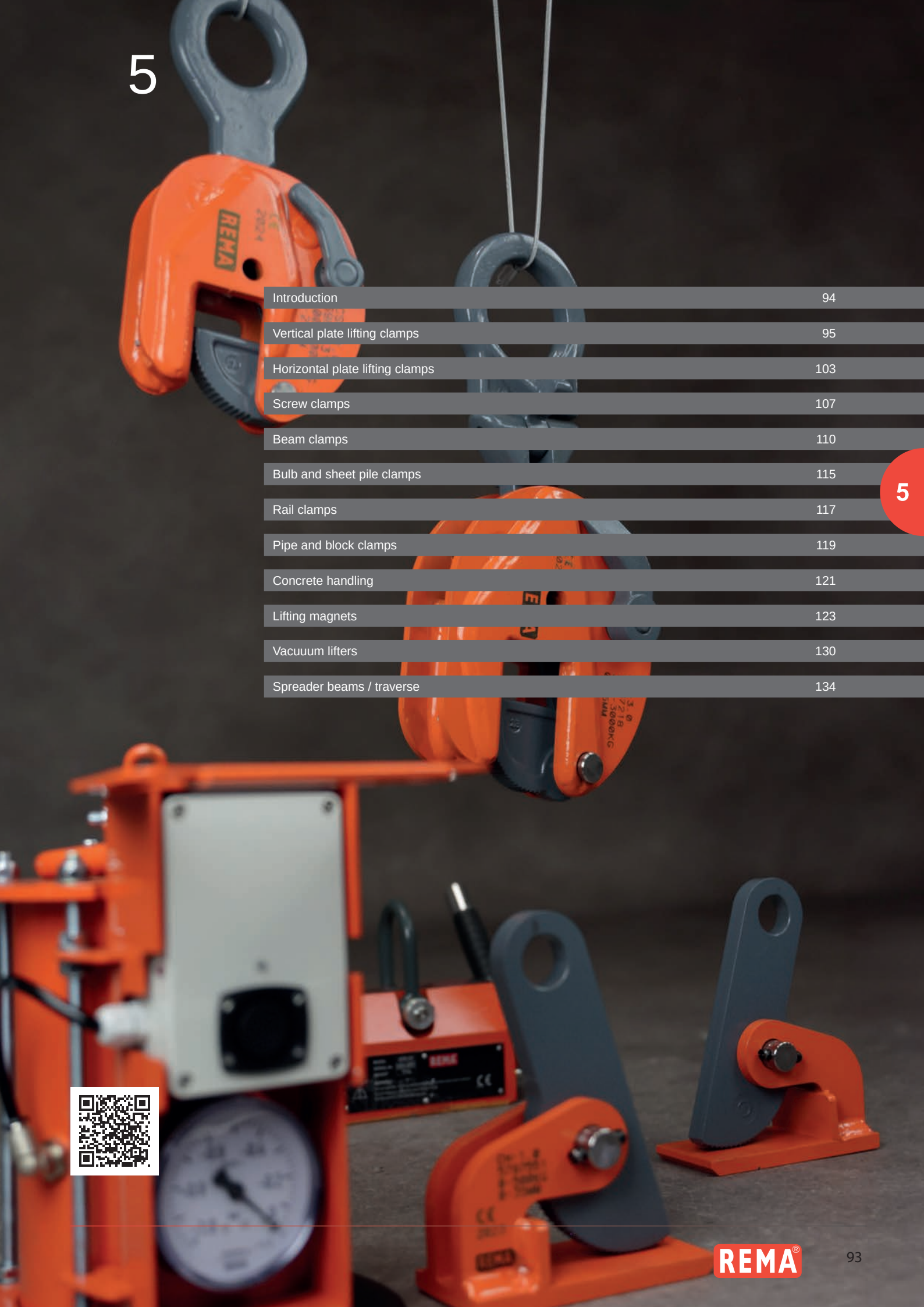

Lifting Clamps – Introduction

Rema has been producing and supplying a large range of industrial lifting lamps for several decades. During that time Rema lifting clamps are proven in many different industries to safely lift plates, boards, sheets, rails and beams of various materials, such as aluminium, (stainless) steel and wood.

Rema lifting clamps are robust, durable and meet the highest European quality standards and comply with NEN-EN 12100:2010 and EN 13155:2020.

Features of Rema lifting clamps

- Outstanding quality and finish.
- Very compact design and low self-weight.
- High hardness of the gripping segments up to HRC 55.
- High wear resistance and long service life.
- Safety factor of 5.
- Clearly structured range of capacities with various jaw openings.
- Lifting clamps are easy to repair; spare parts can be supplied as a set.
- Vertical clamps are equipped with a locking mechanism that applies a pre-load to the plate, preventing it from slipping out of the clamp.
- Each clamp is proof tested (2 × WLL).

IMPORTANT

- Never exceed the safe working load
- Avoid shock loads
- When applying a plate or beam, use the full depth of the jaw opening
- Ensure the locking mechanism is closed before lifting
- Lift long plates and beams using multiple clamps with a spreader beam or chain sling
- Never use a damaged clamp
- For standard clamps, the maximum hardness of the plate or beam is HrC 37 (345 HB, 1 166 N/mm^2)
- Never lift more than one plate at a time
- Lifting clamps are not intended to form a permanent connection with the workpiece (except specific permanent beam/hoisting clamps)
- Welding on a clamp is forbidden as it may affect the original hardness
- Do not use lifting clamps outside the temperature range of –40 °C to +100 °C
- Keep a safe distance when lifting or lowering a load
- Prevent situations where people are under the load
- Develop a procedure for periodic inspections
- Always read the supplied product manual before use
- All plate clamps are supplied with a factory test certificate
- Have your lifting clamps inspected and load tested at least once a year by a certified inspection company



Rema CNM vertical non-marking lifting clamp



The Rema CNM lifting clamp has two jaws lined with special synthetic material. While lifting, the clamp leaves no marks on the lifted workpiece. The clamp can be locked in both the closed and open position.

Features

- Fitted with synthetic polymer jaws.

Application

- For lifting and transporting stainless steel, aluminium, wood and natural stone where the workpiece can not be damaged.

Safe working load depends on the angle of use; refer to the load table for use under different angles.

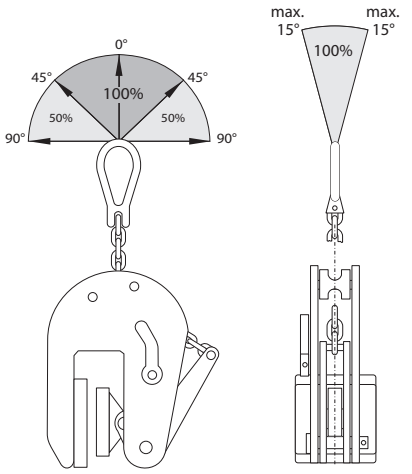

CNM 0.5

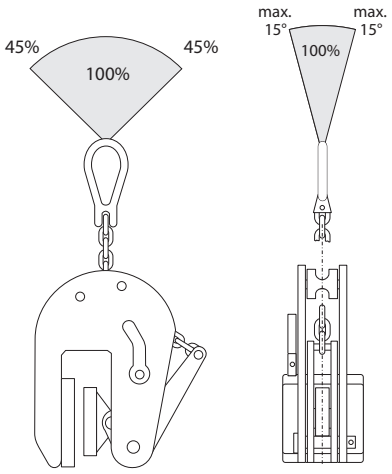

CNM 1.5 - 3.0

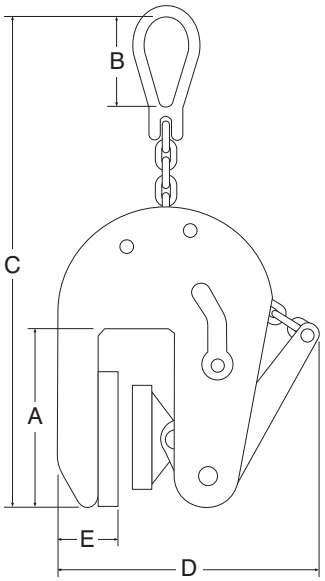

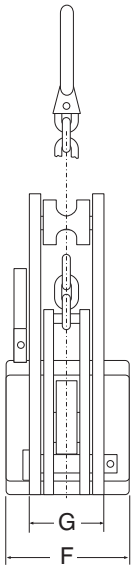

Type	WLL (kg)	Jaw opening (mm)	A (mm)	B (mm)	C (mm)	D (mm)	E (mm)	F (mm)	G (mm)	Weight (kg)	Article number
CNM-0.5	500	1-20	102	65	462	224	48	80	48	6,0	**3315001**
CNM-0.5G	500	17-37	102	65	462	241	48	80	48	6,0	**3315003**
CNM-1.0	1.000	1-30	105	80	470	282	57	80	54	6,5	**3315000**
CNM-1.5	1.500	1-40	105	80	470	282	57	80	54	6,5	**3315002**
CNM-2.0	2.000	1-50	124	100	704	408	63	80	65	15,0	**3315004**
CNM-3.0	3.000	1-60	124	100	704	408	63	80	65	15,5	**3315005**

Rema CNMA adjustable vertical non-marking lifting clamp



The Rema CNMA lifting clamp is fitted with two jaws lined with special synthetic material. While lifting, it leaves no marks on the lifted workpiece. The clamp can be locked in both the closed and open position.

Features

- Available only in a 500 kg version
- Fitted with synthetic polymer jaws
- Jaw opening adjustable in steps of 20 mm from 3 mm to 180 mm

Application

- For lifting and transporting stainless steel, aluminium, wood and natural stone where the workpiece must not be damaged

Safe working load depends on the angle of use; refer to the load table for use under different angles.

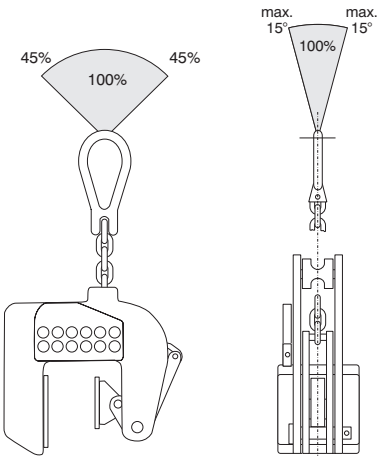

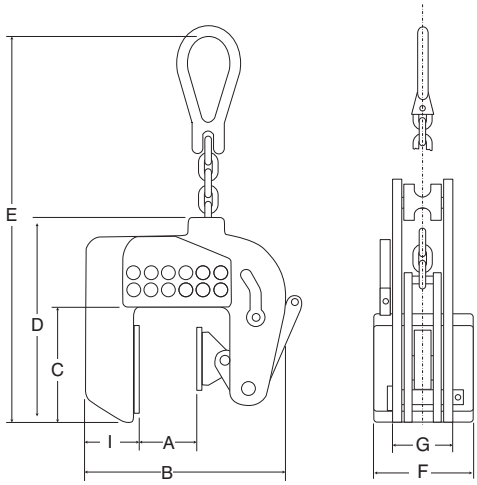

Type	WLL (kg)	Jaw opening (mm)	A (mm)	B (mm)	C (mm)	D (mm)	E (mm)	F (mm)	G (mm)	I (mm)	Weight (kg)	Article number
CNMA-05	500	1-180	1-180	220-340	143	223	360	80	66	61	10,0	**3315006**

Rema CS vertical lifting clamp (for plates up to 37 HRC)



The Rema CS lifting clamp is designed for safe vertical transport of steel plates.

Minimum load is 10 % of the safe working load (WLL).

Features

- Equipped with a standard lifting eye, moveable in one direction.
- Safety locking mechanism uses a spring to apply an initial clamping force.
- WLL and jaw opening are clearly marked on the clamp.
- Safety factor of at least 5 × WLL.
- Each clamp is proof tested at 2 × WLL.

Application

- For lifting steel plates with a hardness up to 37 HRC (345 HB).
- Suitable for lifting, turning 180° and vertical transport of steel plates.

Safe working load depends on the angle of use; refer to the load table for use under different angles.

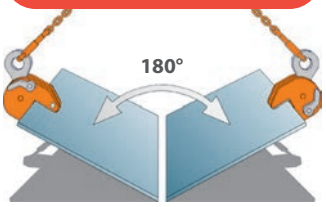

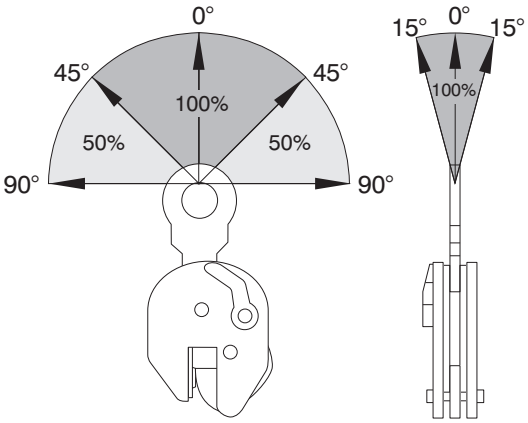

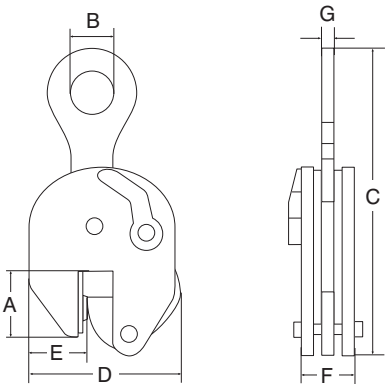

Type	WLL (kg)	Jaw opening (mm)	A (mm)	B (mm)	C (mm)	D (mm)	E (mm)	F (mm)	G (mm)	Weight (kg)	Article number
CS-0.75	750	0-13	47	30	205	100	35	37	10	1,5	**3360001**
CSE-1.0	1.000	0-25	55	45	265	142	38	47	15	3,6	**3360002**
CS-2.0	2.000	0-35	80	65	335	185	55	56	17	6,5	**3361002**
CS-3.0	3.000	0-35	80	65	335	185	55	56	17	7,0	**3361003**
CS-4.0	4.000	0-45	85	70	430	230	60	78	20	16,0	**3361004**
CS-6.0	6.000	0-50	114	75	490	255	78	78	20	20,0	**3361006**
CS-9.0	9.000	0-55	112	75	530	267	70	86	20	26,0	**3361009**
CS-12.0	12.000	0-52	148	85	617	295	100	94	44	42,0	**3361013**
CS-15.0	15.000	0-75	159	86	760	375	135	105	50	71,0	**3361015**

Rema CS-H vertical lifting clamp (for plates up to 50 HRC)



Safe working load depends on the angle of use; refer to the load table for use under different angles.

The Rema CS-H lifting clamp is designed for safe vertical transport of steel plates. Minimum load is 10 % of the safe working load (WLL).

Minimum load is 10 % of the safe working load (WLL).

Features

- Fitted with a standard lifting eye, moveable in one direction.
- Safety lock with spring applies an initial clamping force.
- WLL and jaw opening are clearly marked.
- Safety factor of at least 5 × WLL.
- Each clamp is proof tested at 2 × WLL.

Application

- For lifting steel plates with a hardness up to 50 HRC (485 HB).
- Suitable for lifting, turning 180° and vertical transport.

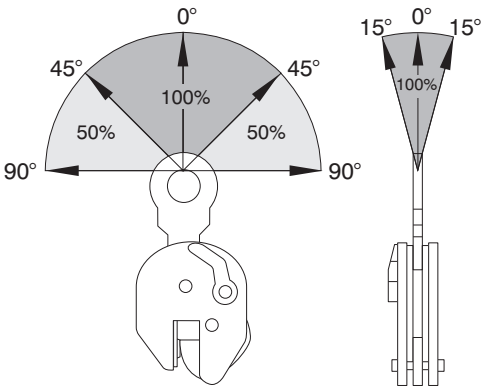

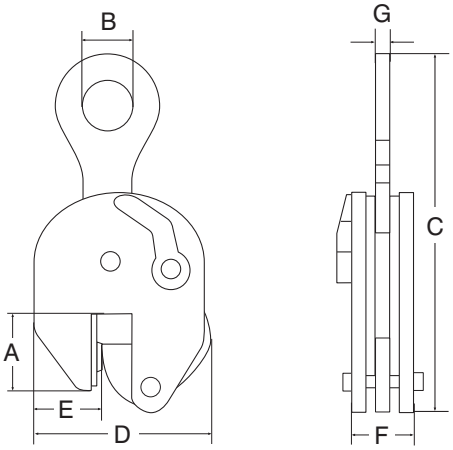

Type	WLL (kg)	Jaw opening (mm)	A (mm)	B (mm)	C (mm)	D (mm)	E (mm)	F (mm)	G (mm)	Weight (kg)	Article number
CS-0.75H	750	0-13	47	30	205	100	35	37	10	1,5	**3361101**
CS-1.0H	1.000	0-25	55	45	265	142	38	47	15	3,6	**3361103**
CS-2.0H	2.000	0-35	80	65	335	185	55	56	17	6,5	**3361105**
CS-3.0H	3.000	0-35	80	65	335	185	55	56	17	7,0	**3361107**
CS-4.5H	4.500	0-45	85	70	430	230	60	77	20	16,0	**3361109**
CSE-6.0H	6.000	0-50	114	78	527	259	82	78	32	24,0	**3361112**

Rema CU universal vertical lifting clamp (for plates up to 37 HRC)



The Rema CU universal lifting clamp has a universal lifting eye for safe hoisting and transport of steel plates.

Minimum load is 10 % of the safe working load (WLL).

Features

- Fitted with a universal lifting eye, moveable in two directions.
- Safety lock applies an initial clamping force via a spring.
- WLL and jaw opening are clearly marked.
- Safety factor of at least 5 × WLL.
- Each clamp is proof tested at 2 × WLL.

Application

- For lifting steel plates with a hardness up to 37 HRC (345 HB).
- Suitable for lifting, turning 180° and vertical transport.

Safe working load depends on the angle of use; refer to the load table for use under different angles.

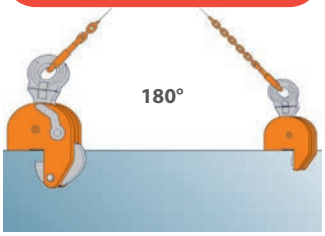

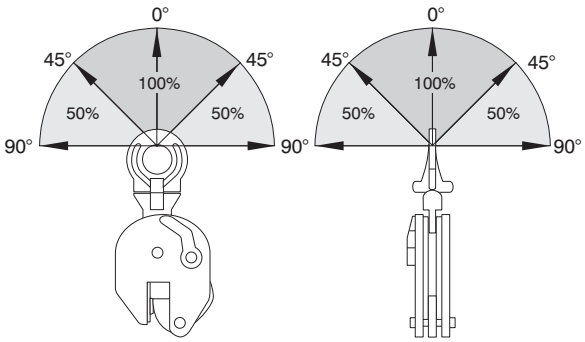

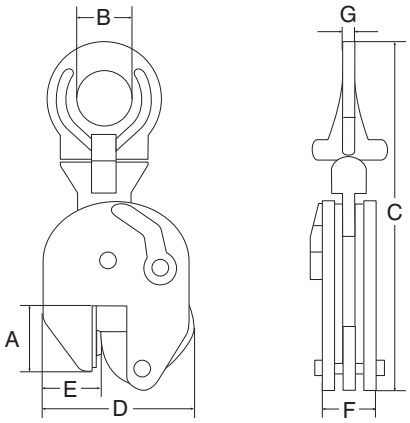

Type	WLL (kg)	Jaw opening (mm)	A (mm)	B (mm)	C (mm)	D (mm)	E (mm)	F (mm)	G (mm)	Weight (kg)	Article number
CU-0.75	750	0-13	47	30	203	100	35	37	10	1,7	**3362001**
CUE-1.0	1.000	0-25	55	50	295	125	38	47	14	3,9	**3362002**
CU-2.0	2.000	0-35	80	70	370	185	55	56	16	7,3	**3363002**
CU-3.0	3.000	0-35	80	70	370	185	55	56	16	8,0	**3363003**
CU-4.0	4.000	0-45	85	70	430	230	60	78	20	17,0	**3363004**
CU-6.0	6.000	0-50	114	78	527	255	78	78	32	22,0	**3363006**
CU-9.0	9.000	0-55	112	78	565	267	70	86	45	30,0	**3363009**
CU-12.0	12.000	0-52	148	85	650	295	100	94	48	44,0	**3363013**
CU-15.0	15.000	0-76	159	85	765	373	136	106	48	75,0	**3363015**

Rema CU-H universal vertical lifting clamp (for plates up to 50 HRC)



The Rema CU-H universal lifting clamp has a universal lifting eye for safe hoisting and transport of steel plates.

Minimum load is 10 % of the safe working load (WLL).

Features

- Equipped with a universal lifting eye, moveable in two directions.
- Safety lock applies an initial clamping force via a spring.
- WLL and jaw opening are clearly marked.
- Safety factor of at least 5 × WLL.
- Each clamp is proof tested at 2 × WLL.

Application

- For lifting steel plates with a hardness up to 50 HRC (485 HB).
- Suitable for lifting, turning 180° and vertical transport.

Safe working load depends on the angle of use; refer to the load table for use under different angles.

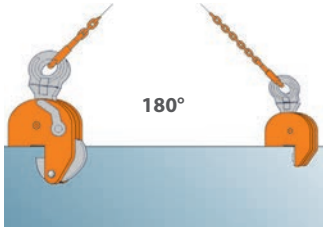

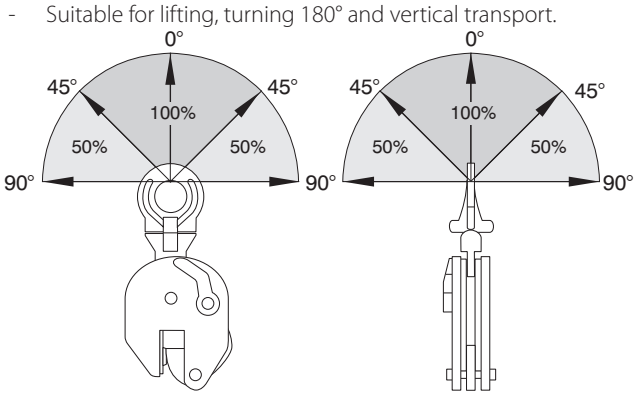

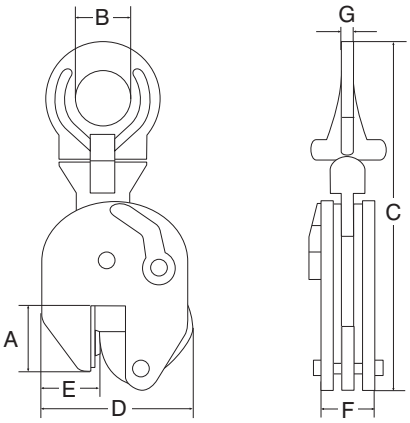

Type	WLL (kg)	Jaw opening (mm)	A (mm)	B (mm)	C (mm)	D (mm)	E (mm)	F (mm)	G (mm)	Weight (kg)	Article number
CU-0.75H	750	0-13	47	30	203	100	35	37	10	1,7	**3363101**
CU-1.0H	1.000	0-25	55	50	295	142	38	47	14	3,9	**3363103**
CU-2.0H	2.000	0-35	80	70	370	185	55	56	16	7,3	**3363105**
CU-3.0H	3.000	0-35	80	70	370	185	55	56	16	8,0	**3363107**
CU-4.5H	4.500	0-45	85	70	430	230	60	78	20	17,0	**3363109**
CUE-6.0H	6.000	0-50	114	78	527	259	82	78	32	24,0	**3363112**

Rema CUER lifting clamp for stainless-steel plates

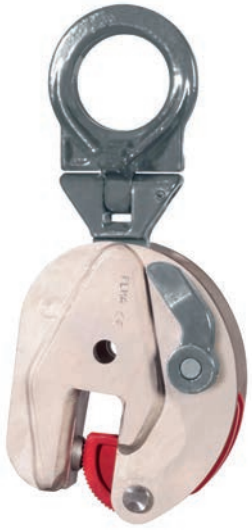

Safe working load depends on the angle of use; refer to the load table for use under different angles.

The Rema CUER lifting clamp is designed for safe lifting and vertical transport of stainless-steel plates.

Minimum load is 10 % of the safe working load (WLL).

Features

- Segment, segment pin and pivot are made of stainless steel.
- Housing and locking pin are nickel-plated to prevent corrosion by carbon steel.
- Maximum hardness of plate material: 34 HRC (345 HB).

Application

- For lifting and transporting stainless-steel plates in vertical position where corrosion resistance is essential.

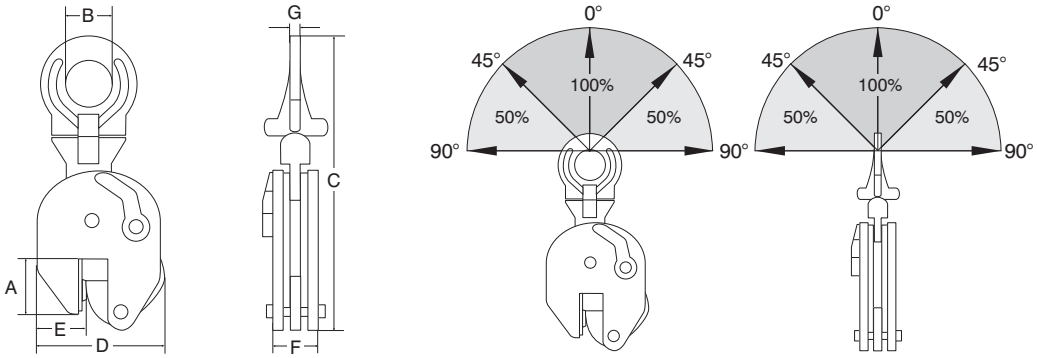

Type	WLL (kg)	Jaw opening (mm)	A (mm)	B (mm)	C (mm)	D (mm)	E (mm)	F (mm)	G (mm)	Weight (kg)	Article number
CUER-1.0	1.000	0-25	56	50	292	141	37	47	15	3,8	**3363301**
CUER-2.0	2.000	0-35	78	70	372	183	56	56	16	8,0	**3363302**

Rema CSEU adjustable vertical lifting clamp



Safe working load depends on the angle of use; refer to the load table for use under different angles.

The Rema CSEU lifting clamp is designed for lifting and transporting plates and structures from any position.

Minimum load is 10 % of the safe working load (WLL).

Features

- Ideal when one clamp with variable jaw opening is desired.
- Jaw opening adjustable in 30 mm increments.
- Strong and lightweight construction.

Application

- For lifting steel plates with a hardness up to 37 HRC (345 HB) in any orientation.

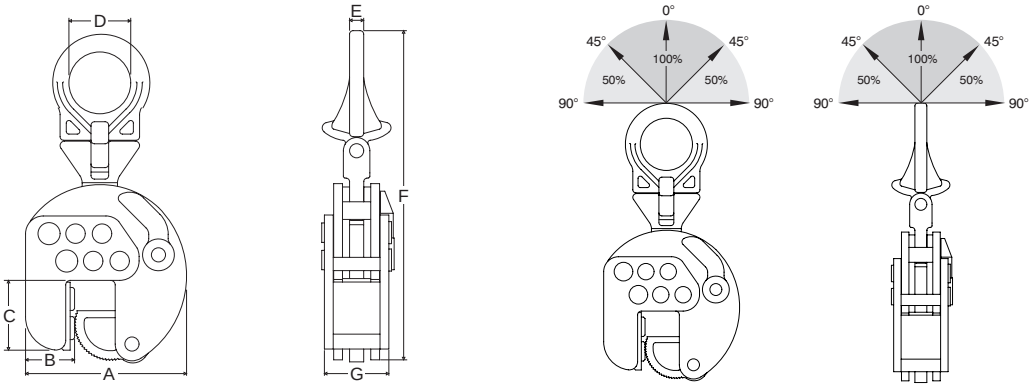

Type	WLL (kg)	Jaw opening (mm)	A (mm)	B (mm)	C (mm)	D (mm)	E (mm)	F (mm)	G (mm)	Weight (kg)	Article number
CSEU-3	3.000	0-95	182-245	55	80	70	16	370	73	11,0	**3313020**

Rema CBT vertical lifting clamp with movable pivot



Safe working load depends on the angle of use; refer to the load table for use under different angles.

The Rema CBT lifting clamp is designed for vertical lifting and transport of thin sheet materials. The clamp's movable pivot applies extra pressure to eliminate the risk of slipping.

Features

- Movable pivot ensures secure grip.
- No minimum load required.

Application

- For lifting steel plates up to a hardness of 37 HRC (345 HB) where thin materials need extra clamping pressure.

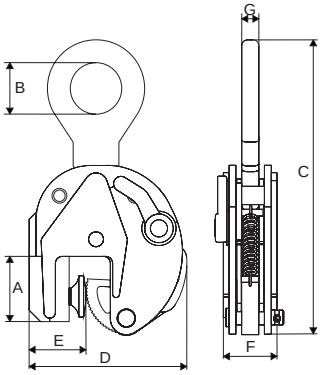

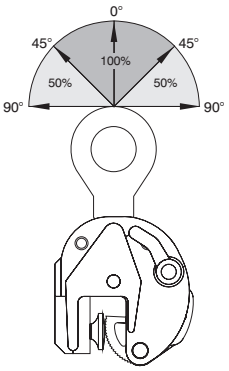

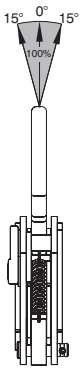

Type	WLL (kg)	Jaw opening (mm)	A (mm)	B (mm)	C (mm)	D (mm)	E (mm)	F (mm)	G (mm)	Weight (kg)	Article number
CBT-0.25	250	0-13	53	30	200	110	50	38	10,5	1,85	**3364000**
CBT-1	1.000	0-20	57	45	258	138	50	47	15,0	4,00	**3364001**

Rema CBTU vertical lifting clamp with movable pivot



Safe working load depends on the angle of use; refer to the load table for use under different angles.

Similar to the Rema CBT lifting clamps but with a movable lifting eye; designed for vertical lifting and transport of thin sheet metal. The movable anvil provides extra pressure to prevent slipping.

Features

- Movable pivot ensures secure grip.
- Movable lifting eye.
- No minimum load required.

Application

- For lifting steel plates up to a hardness of 37 HRC (345 HB) where both adjustable load alignment and extra clamping pressure are needed.

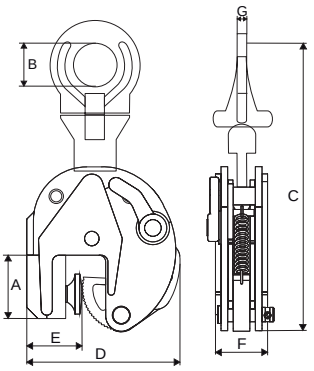

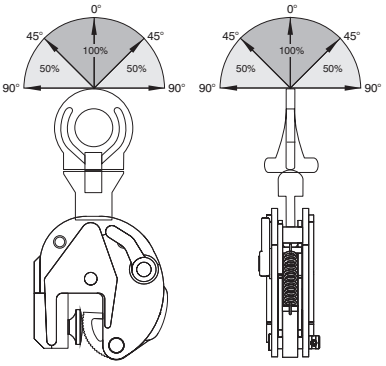

Type	WLL (kg)	Jaw opening (mm)	A (mm)	B (mm)	C (mm)	D (mm)	E (mm)	F (mm)	G (mm)	Weight (kg)	Article number
CBTU-0.25	250	0-13	53	30	200	110	50	38	10,5	2,0	**3364100**

Rema CH horizontal lifting clamp



Safe working load depends on the angle of use; refer to the load table for use under different angles.

The Rema CH clamp is designed for safe horizontal lifting and transport of steel plates that will not deflect under their own weight. Always use two clamps.

Features

- WLL and jaw opening are clearly marked on the clamp.
- Suitable for lifting and horizontal transport of steel plates that do not bend.
- These clamps can also be used perpendicular beneath a spreader beam.
- Low weight and compact design.
- Safety factor of at least 5 × WLL.
- Each clamp is proof tested at 2 × WLL.

Application

- For lifting steel plates up to a hardness of 37 HRC (345 HB).
- For safe horizontal transport of steel plates.

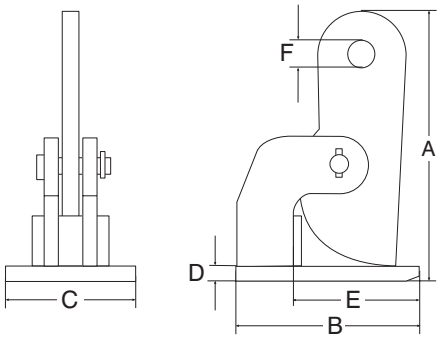

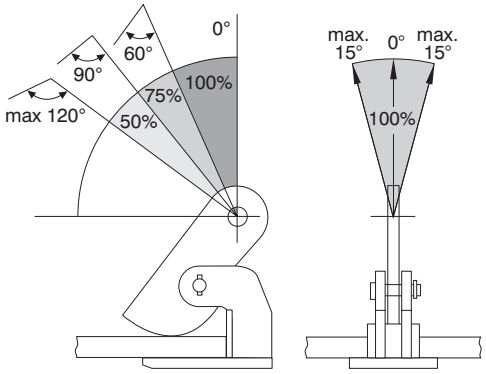

Type	WLL (kg)	Jaw opening (mm)	A (mm)	B (mm)	C (mm)	D (mm)	E (mm)	F (mm)	Weight (kg)	Article number
CH-1.0	1000/2	0- 35	188	140	65	10	100	25	5,2/2	**3365001**
CH-2.0	2000/2	0- 60	290	180	90	15	115	31	15,0/2	**3365002**
CH-4.0	4000/2	0- 60	306	220	105	25	145	31	26,0/2	**3365004**
CH-6.0	6000/2	0- 60	306	220	110	25	145	31	26,0/2	**3365006**
CH-8.0	8000/2	0- 60	335	225	120	35	135	31	36,0/2	**3365008**
CH-10.0	10000/2	0- 60	335	225	120	35	135	31	40,0/2	**3365010**
CH-2.0/L	2000/2	0-100	380	180	90	15	120	31	18,0/2	**3365102**
CH-4.0/L	4000/2	0-100	415	220	105	25	145	31	30,0/2	**3365104**
CH-6.0/L	6000/2	0-100	415	220	120	25	145	31	32,0/2	**3365106**
CH-8.0/L	8000/2	0-100	430	225	120	35	135	31	44,0/2	**3365108**
CH-10.0/L	10000/2	0-100	430	225	120	35	135	31	46,0/2	**3365110**

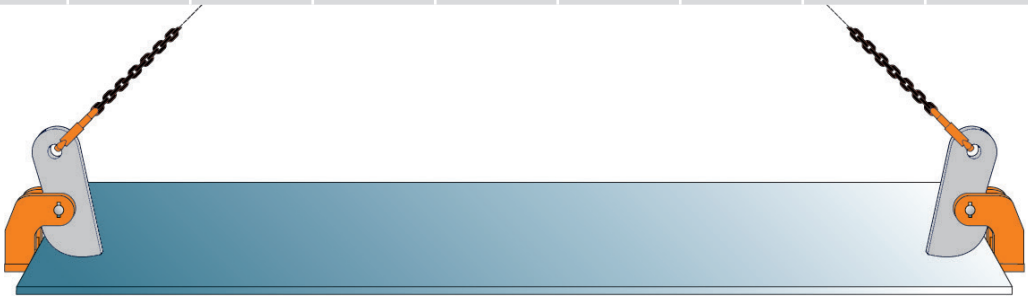

Rema CHT horizontal lifting clamp



The Rema CHT lifting clamp is designed for thin steel plates. These clamps must always be used in pairs.

Features

- Always use in pairs.
- WLL and jaw opening are clearly marked on the clamp.
- Safety factor of at least 5 × WLL.
- Each clamp is proof tested at 2 × WLL.

Application

- For lifting thin steel plates horizontally up to a hardness of 37 HRC (345 HB).

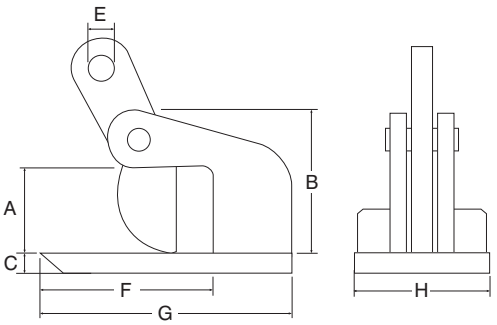



Type	WLL (kg)	Jaw opening (mm)	A (mm)	B (mm)	C (mm)	E (mm)	F (mm)	G (mm)	H (mm)	Weight (kg)	Article number
CHT-1.0	1.000/2	0-15	0-15	85	10	22,5	99	140	65	5,0/2	**3309001**
CHT-2.0	2.000/2	0-35	0-35	135	20	26,0	114	180	90	16,0/2	**3309002**

Rema CNMH non-marking horizontal lifting clamp



The Rema CNMH non-marking clamp is designed for safe horizontal transport of flat plates where the surface may not be damaged, such as stainless steel, aluminium or wood. The clamp's jaws and bed are covered with high-quality pressure-resistant synthetic material.

Application

- Non-marking synthetic jaws and bed protect the workpiece.
- Always use in pairs.
- Lightweight and compact design.
- Each clamp is proof tested at 2 × WLL and has a safety factor of 5 × WLL.

Safe working load depends on the angle of use; refer to the load table for use under different angles.

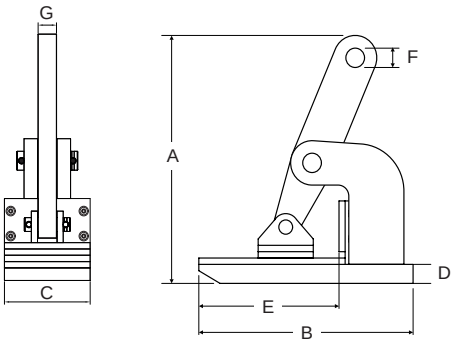

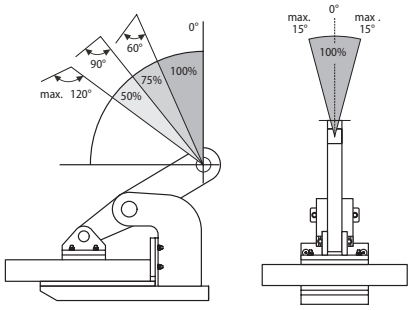

Type	WLL (kg)	Jaw opening (mm)	A (mm)	B (mm)	C (mm)	D (mm)	E (mm)	F (mm)	G (mm)	Weight (kg)	Article number
CNMH-1	1.000/2	0-25	154	140	65	15	95	20,0	15	7,0/2	**3366001**
CNMH-2	2.000/2	0-45	270	225	90	23	150	30,5	15	18,0/2	**3366002**
CNMH-3	3.000/2	0-45	275	225	90	28	150	30,5	15	26,0/2	**3366003**
CNMH-4	4.000/2	0-50	305	250	105	28	160	30,5	20	32,0/2	**3366004**
CNMH-6	6.000/2	0-50	310	250	120	33	160	30,5	20	34,0/2	**3366006**

Rema CHTV horizontal lifting clamp with spring



Safe working load depends on the angle of use; refer to the load table for use under different angles.

The Rema CHTV lifting clamp is equipped with a torsion spring that keeps the clamp closed in the desired position. A single person can place four clamps and operate a crane.

Features

- Torsion spring holds the clamp closed.
- Designed for horizontal transport of steel plates.
- One person can position four clamps and control a crane.
- Suitable for lifting thin steel plates horizontally up to a hardness of 37 HRC (345 HB).
- Always use in pairs.

Application

- For lifting thin steel plates horizontally, especially where quick and secure placement is required.

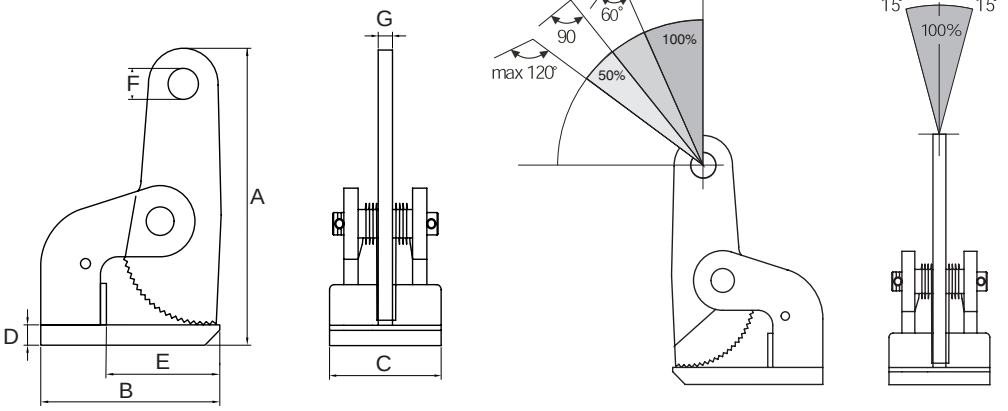

Type	WLL (kg)	Jaw opening (mm)	A (mm)	B (mm)	C (mm)	D (mm)	E (mm)	F (mm)	G (mm)	Weight (kg)	Article number
CHTV-1	1.000/2	0-35	193	140	85	10	100	25,0	15	6,0/2	**3369001**
CHTV-2	2.000/2	0-60	290	180	125	15	115	30,5	16	18,0/2	**3369002**
CHTV-3	3.000/2	0-60	293	180	125	20	115	30,5	16	20,0/2	**3369003**
CHTV-4	4.000/2	0-60	310	220	165	30	140	30,5	20	30,0/2	**3369004**
CHTV-6	6.000/2	0-60	310	220	165	30	140	30,5	20	30,0/2	**3369006**

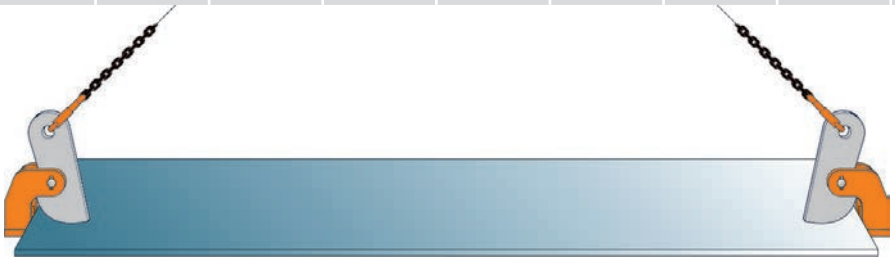

Rema CHV adjustable horizontal lifting clamp



The Rema CHV adjustable horizontal lifting clamp is designed for safe lifting and movement of bundled packages or single plates in a horizontal position. These clamps must always be used in pairs.

Features

- Adjustable jaw opening for handling different package widths.
- Designed for both packaged bundles and single plates.
- Use in pairs for balanced lifting.
- Suitable for lifting thin steel plates horizontally up to a hardness of 37 HRC (345 HB).

Application

- For horizontal lifting and transport of packaged bundles or single plates; always use two clamps for safe operation.

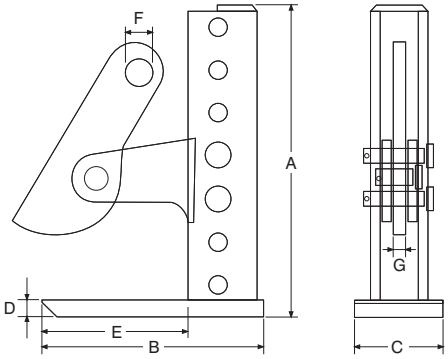

Type	WLL (kg)	Jaw opening (mm)	A (mm)	B (mm)	C (mm)	D (mm)	E (mm)	F (mm)	G (mm)	Weight (kg)	Article number
CHV-1.5	1.500/2	3-180	290	200	90	15	135	30	20	18,0/2	**3315011**
CHV-1.5X	1.500/2	3-300	410	200	90	15	135	30	20	23,0/2	**3315013**
CHV-3.0	3.000/2	3-180	300	235	105	20	165	30	20	29,0/2	**3315015**
CHV-3.0X	3.000/2	3-300	410	235	105	20	165	30	20	31,0/2	**3315017**
CHV-4.5	4.500/2	3-180	300	235	105	20	165	30	20	32,0/2	**3315019**
CHV-4.5X	4.500/2	3-420	535	235	105	20	170	30	20	34,0/2	**3315021**
CHV-6.0	6.000/2	3-180	305	250	120	25	160	30	20	40,0/2	**3315023**
CHV-6.0X	6.000/2	3-420	540	250	120	25	165	30	20	46,0/2	**3315025**
CHV-9.0	9.000/2	3-180	305	250	120	25	160	30	20	51,0/2	**3315027**
CHV-9.0X	9.000/2	3-420	540	250	120	25	165	30	20	60,0/2	**3315029**

Rema CSH screw clamp



The Rema CSH screw clamp is used for positioning and turning steel plates, steel sections and curved plates. As the load increases, the clamping force is distributed over a larger part of the segment.

Features

- Suitable for lifting and transporting steel objects in both horizontal and vertical positions.
- No minimum load required.
- For lifting thin steel plates horizontally up to a hardness of 37 HRC (345 HB).
- Tightening torque: 10 Nm for 500 kg; 40 Nm for 1,000 – 6,000 kg.

Application

- For positioning, turning and lifting steel plates, sections and curved plates in horizontal or vertical orientation.

Safe working load depends on the angle of use; refer to the load table for use under different angles.

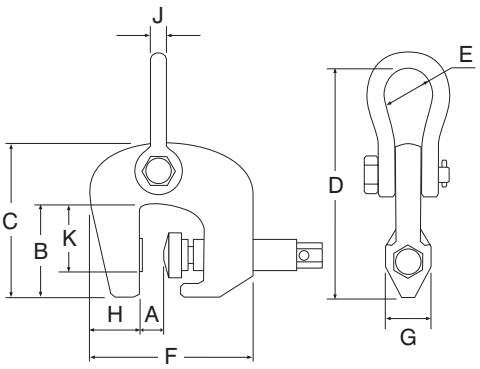

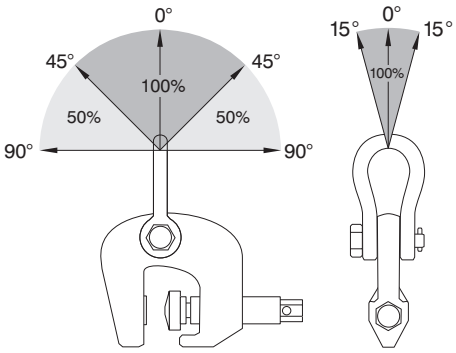

Type	WLL (kg)	Jaw opening A (mm)	B (mm)	C (mm)	D (mm)	E (mm)	G (mm)	H (mm)	J (mm)	K (mm)	Weight (kg)	Article number
CSH-0.5	500	0-35	47	82	211	25	27	26	10	38	0,85	**3313003**
CSH-1.0	1.000	0-40	80	140	232	46	46	40	16	50	3,30	**3313006**
CSH-1.5	1.500	0-40	87	140	232	46	46	40	16	60	3,70	**3313007**
CSH-3.0	3.000	0-60	100	184	278	50	60	46	19	72	7,80	**3313009**
CSH-6.0	6.000	0-100	130	249	390	100	75	70	32	90	22,00	**3313011**

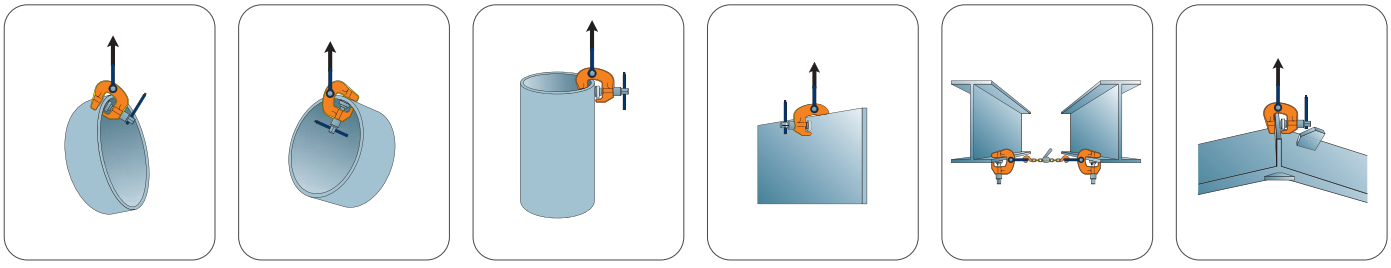

Elephant WF screw clamp



The Elephant WF screw clamp is very lightweight clamps with a high capacity thanks to a double round pivot. The high-grade alloy steel housing provides a safety factor of 8. A double locking mechanism with a movable pivot increases clamping capacity.

Features

- Double round pivot locking for strong clamping force and safe operation.
- Two suspension holes allow work to be carried out in all directions.
- Can lift slanted loads such as I-beams.
- Fine-thread adjusting screw.
- Powder-coated finish.
- Pivots and screw specially treated to prevent rust.

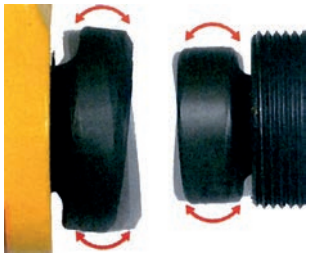

Application

- For lifting and transporting steel materials including H-beams, I-beams, steel plates, pipes, angles and steel posts.
- Also suited for positioning workpieces with chain hoists, pulleys and other systems.
- Can be used for dragging steel plates and other materials across the floor.

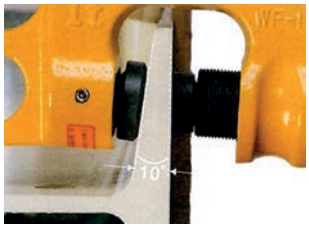

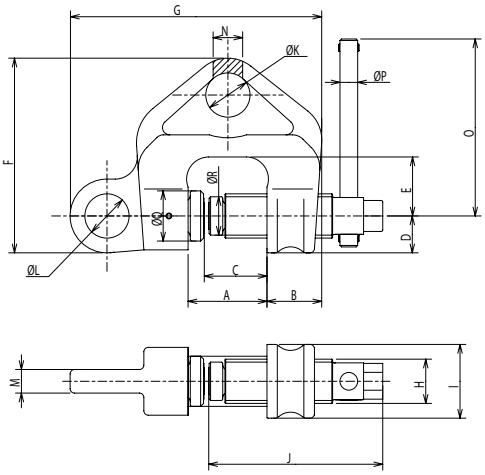

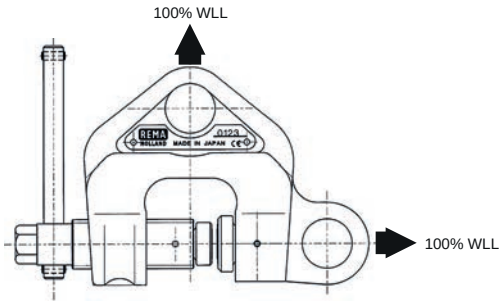

Type	WLL (kg)	Min. load (kg)	Jaw opening (mm)	Weight (kg)	Article number
WF-0.5	500	50	3-28	1,5	**3316001**
WF-1.0	1.000	100	3-40	2,9	**3316003**
WF-2.0	2.000	200	3-45	4,9	**3316005**
WF-3.0	3.000	300	6-49	7,2	**3316007**
WF-5.0	5.000	500	9-53	10,0	**3316009**

Type	A (mm)	B (mm)	C (mm)	D (mm)	E (mm)	F (mm)	G (mm)	H (mm)	I (mm)	J (mm)	K (mm)	L (mm)	M (mm)	N (mm)	O (mm)	P (mm)	Q (mm)	R (mm)
WF-0.5	41,0	32	30,5	21	33	108	138	34	42	10	25	24,5	12	16	120	10	26	21
WF-1.0	53,5	38	42,5	25	40	132	172	34	50	10	30	29,5	16	20	120	12	34	26
WF-2.0	60,0	45	47,5	31	41	157	202	34	62	10	34	33,0	22	28	150	12	36	29
WF-3.0	65,5	52	51,5	35	44	170	230	34	70	10	35	40,5	28	33	160	12	40	36
WF-5.0	71,0	57	55,5	38	46	187	248	34	75	10	40	45,0	38	40	180	12	41	36

Rema CBS bulb screw clamp



The Rema CBS screw-type clamp for bulb sections, provides a (temporary) lifting point in areas with HP profiles such as ship sections or engine rooms.

Features

- Threaded spindle for easy attachment and strong clamping force.
- Lightweight design for easy handling.
- Service-friendly: parts can be replaced on request.

Application

- Used as a (temporary) lifting point in areas with HP profiles.
- Suitable for HP-100 to HP-240 profiles.

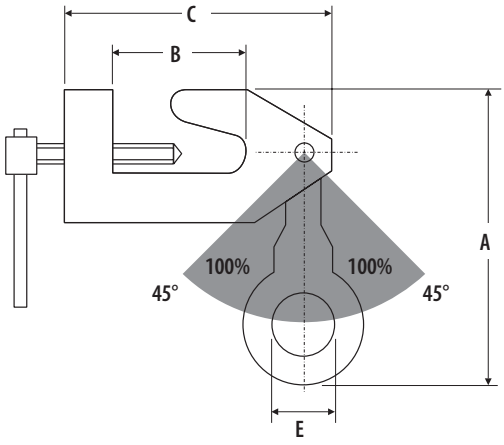

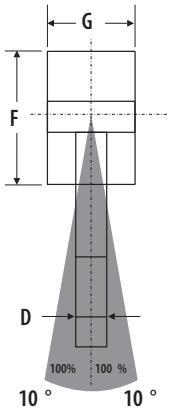

Type	WLL (kg)	Jaw opening (mm)	A (mm)	B (mm)	C (mm)	D (mm)	E (mm)	F (mm)	G (mm)	Weight (kg)	Article number
CBS-1.5	1.500	HP100-240	180	75	150	16	45	75	40	3,0	**3313018**
CBS-3.0	3.000	HP100-240	205	75	150	16	45	75	80	6,5	**3313019**

Rema CSV spindle beam clamp



The Rema CSV beam clamp is developed for lifting steel beams or for creating a semi-permanent lifting point..

Features

- Beam clamp with threaded spindle for quick and easy mounting.
- Safety factor of at least 5 × WLL.
- Each clamp is proof tested at 2 × WLL.

Application

- Lifting and moving steel beams or creating a semi-permanent lifting eye.

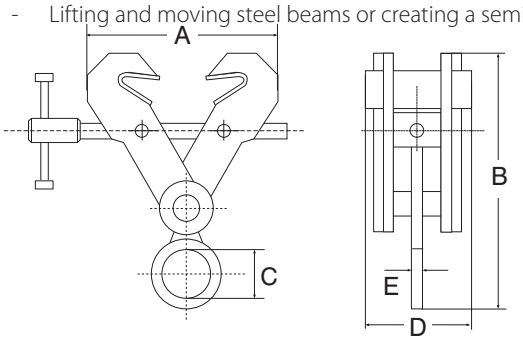

Type	WLL (kg)	Jaw opening (mm)	Max. flange width (mm)	A (mm)	B (mm)	C (mm)	D (mm)	E (mm)	Weight (kg)	Article number
CSV-1.0	1.000	75 - 190	30	135 - 250	300	75	120	16	4,0	**3368001**
CSV-2.0	2.000	75 - 190	30	135 - 250	300	75	120	16	5,0	**3368002**
CSV-3.0	3.000	75 - 190	30	135 - 250	300	75	120	16	5,0	**3368003**
CSV-5.0	5.000	150 - 300	40	230 - 380	450	80	180	20	15,0	**3368005**

Rema KSB spindle beam clamp



The Rema KSB beam clamp is designed for safely lifting and moving steel beams or as a fixed suspension point.

Features

- Low construction height.
- Easy mounting via a spindle.
- Suitable for IPE and INP beams.
- Safety factor 4 × WLL.

Application

- For lifting, moving or suspending steel beams in construction or industrial applications.

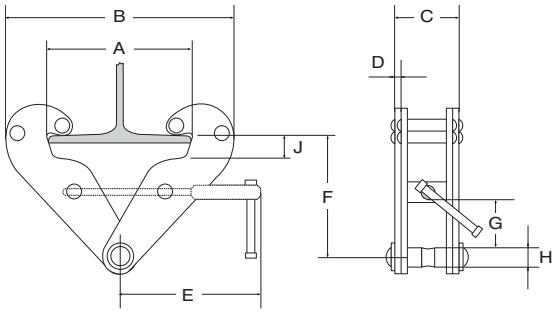

Type	WLL (kg)	Jaw opening (mm)	A max (mm)	B max (mm)	B min (mm)	C (mm)	D (mm)	E (mm)	F max (mm)	F min (mm)	G (mm)	H (mm)	J (mm)	Weight (kg)	Article number
KSB-1	1.000	80-240	270	370	370	94	4	198	154	100	22	20	20	3,5	**3317001**
KSB-2	2.000	80-240	270	370	183	102	6	198	154	100	22	20	20	4,5	**3317002**
KSB-3	3.000	90-330	355	500	243	132	8	263	219	148	46	22	38	9,5	**3317003**
KSB-5	5.000	90-330	355	500	243	142	10	263	219	148	43	28	38	11,0	**3317005**
KSB-10	10.000	90-350	364	521	269	180	12	285	239	165	51	38	38	18,0	**3317010**

Rema KSBO spindle beam clamp



The Rema KSBO beam clamp is designed for safe lifting and moving of steel beams or as a fixed suspension point.

Features

- Equipped with a suspension eye.
- Spindle can be locked with an Allen key for extra safety.
- Easy mounting via a spindle.
- Suitable for IPE and INP beams.
- Safety factor 4 × WLL.

Application

- For lifting or suspending steel beams where additional safety is required.

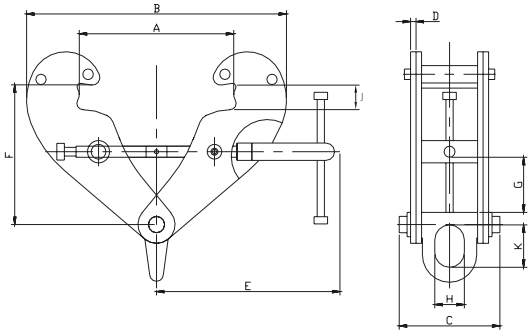

Type	WLL (kg)	Jaw opening (mm)	Max. flange width (mm)	A max (mm)	B min (mm)	B max (mm)	C (mm)	D (mm)	E (mm)	F min (mm)	F max (mm)	G (mm)	H (mm)	K (mm)	Weight (kg)	Article number
KSBO-1	1.000	80-245	20	270	183	370	94	4	218	100	154	18	28	43	4,0	**3317101**
KSBO-2	2.000	80-245	20	270	183	370	102	6	218	100	154	18	28	43	5,0	**3317102**
KSBO-3	3.000	90-330	38	355	243	500	132	8	276	148	219	40	43	60	10,0	**3317103**
KSBO-5	5.000	90-330	38	355	243	500	142	10	276	148	219	40	43	60	12,0	**3317105**
KSBO-10	10.000	90-340	38	364	269	521	180	12	301	165	239	47	62	91	18,5	**3317110**

Rema RMBC adjustable beam clamp



The Rema RMBCV adjustable spindle beam clamp has movable jaws that automatically grip beam flanges for larger jaw openings.

Features
- Compact and lightweight design.
- Quick and easy mounting.

Application
- Creating a semi-permanent lifting point on various beam sizes.

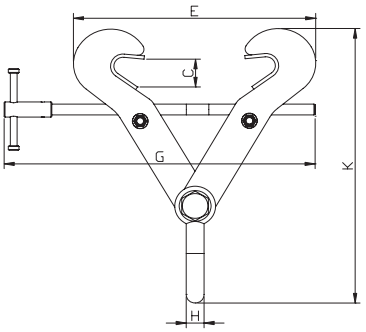

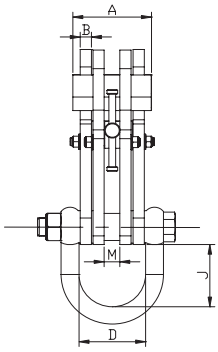

Type	WLL (kg)	Jaw opening (mm)	A (mm)	B (mm)	C (mm)	D (mm)	E max (mm)	G (mm)	H (mm)	J (mm)	K min (mm)	M (mm)	Weight (kg)	Article number
RMBC-2T	2.000	76-190	125	6	27	107	272	276	20	85	254	42,5	4,0	**3318201**
RMBC-3T	3.000	76-190	130	14	27	107	272	276	20	85	254	42,5	8,0	**3318203**
RMBC-5T	5.000	150-305	140	14	46	122	450	409	25	99	319	57,5	15,0	**3318205**
RMBC-6T	6.000	203-457	140	14	55	116	600	559	25	99	418	50,0	18,8	**3318206**
RMBC-10T	10.000	203-457	140	20	55	119	600	559	32	99	418	28,0	28,0	**3318210**
RMBC-15T	15.000	203-457	175	20	76	120	681	660	40	185	555	28,0	47,0	**3318215**
RMBCE-15T	15.000	406-610	175	20	76	120	834	810	40	185	634	28,0	52,8	**3318216**

Rema RMBCV adjustable beam clamp





The Rema RMBCV adjustable spindle beam clamp has movable jaws that automatically grip beam flanges for larger jaw openings.

Features
- Robust design.
- Large jaw openings.
- Quick mounting.

Application
- For creating a lifting point on beams that require larger jaw openings and automatic gripping.

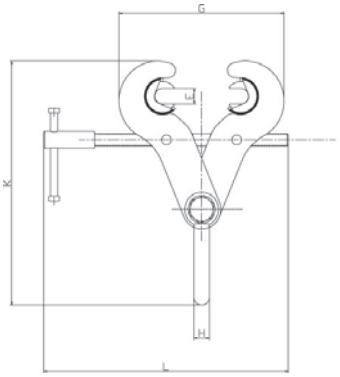

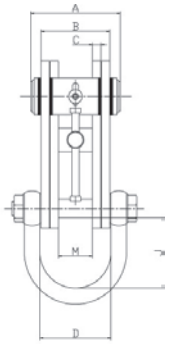

Type	WLL (kg)	Jaw opening (mm)	A (mm)	B (mm)	C (mm)	D (mm)	E (mm)	G max (mm)	H (mm)	J (mm)	K min (mm)	L (mm)	M (mm)	Weight (kg)	Article number
RMBCV-3T	3.000	89-305	144	102	8	107	25,4	418	20	100	322	410	10,0	10,0	**3318303**
RMBCV-5T	5.000	89-305	144	118	14	122	25,4	418	25	115	346	409	57,5	15,5	**3318305**
RMBCV-10T	10.000	89-305	144	114	20	119	25,4	426	32	106	355	409	28,0	22,0	**3318310**

Rema RMAC adjustable angle clamp



The Rema RMAC adjustable spindle beam clamp is designed for creating a semi-permanent lifting point on angle bar. A second screw clamp secures the clamp so it cannot slip off the profile.

Features
- Simple and quick mounting.
- Suitable for various sizes of angle profiles.

Application
- For attaching a lifting point to angle sections used in construction or fabrication.

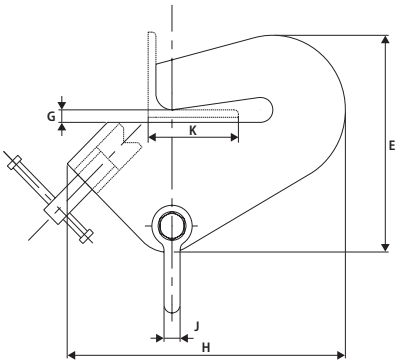

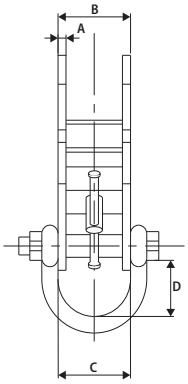

Type	WLL (kg)	A (mm)	B (mm)	C (mm)	D (mm)	E (mm)	G (mm)	H (mm)	J (mm)	K (mm)	Weight (kg)	Article number
RMAC-1T	1.000	6	69	70	96	206	15,0	258	16	38-101	4,5	**3318403**
RMAC-1.5T	1.500	8	99	107	98	270	19,0	346	20	50-152	11,0	**3318405**
RMAC-3T	3.000	10	99	107	98	343	25,4	490	20	101-203	21,5	**3318407**

Rema RMMC insallation clamp



The Rema RMMC installation clamp designed so that heavy loads can be lifted easily using two hand hoists for installation, provided there is enough space above the beam.

Features
- Simple and quick mounting.
- Suitable for various sizes of angle profiles.

Application
- For installation work where heavy loads must be lifted with two hand hoists and adequate space above the beam is available.



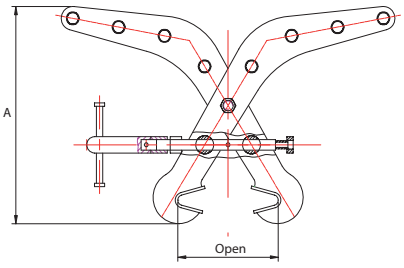



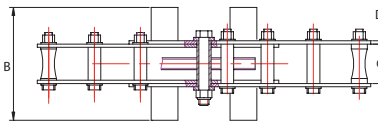

Type	WLL (kg)	Flange width (mm)	A (mm)	B (mm)	C (mm)	D (mm)	Weight (kg)	Article number
RMMC-0.2T	200	90-204	357	150	60	4	7,2	**3318501**

Rema CBV beam lifting clamp



The Rema CBV beam clamp is developed for safe lifting and moving of steel beams with the flanges in a vertical position; minimum load 10% of the safe working load.

Features
- Lifting eye positioned as close as possible to the beam's centre of gravity.
- For vertical lifting, transporting and stacking of steel H-beams, profiles and constructions where the load must remain perfectly aligned.
- Specially recommended for transporting and stacking steel beams (e.g., cutting, stacking, building steel constructions).
- Jaw openings available from 0 to 25 mm.
- Maximum surface hardness of the material: 37 HRC / 345 HB.

Application
- For vertical lifting and stacking of steel beams, profiles and constructions.

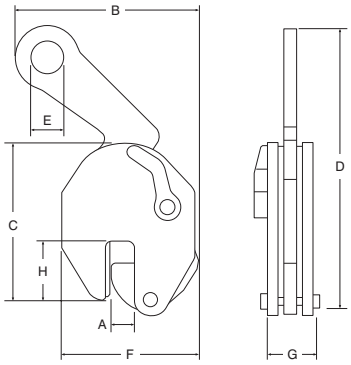

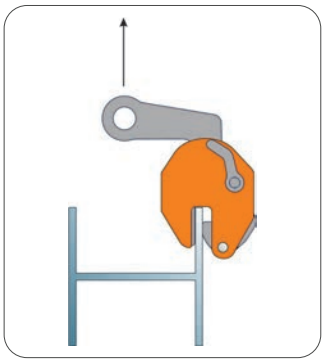

Type	WLL (kg)	Jaw opening (mm)	A (mm)	B (mm)	C (mm)	D (mm)	E (mm)	F (mm)	G (mm)	H (mm)	Weight (kg)	Article number
CBV-1.0	1.000	0-15	0-15	175	150	226	35	130	35	47	4,0	**3313000**
CBV-2.0	2.000	0-20	0-20	265	200	345	60	165	56	67	8,0	**3313001**
CBV-3.0	3.000	0-25	0-25	325	235	410	72	192	77	65	16,0	**3313002**

Rema COBK beam lifting clamp



The Rema COBK beam clamp is equipped with a mechanism that ensures the beam does not slip out during transport. The clamp locks in both open and closed positions.

Features
- Designed for lifting and transporting steel beams, profiles and structural components.
- Suitable for lifting beams from the sides or from the ends.

Options
- Other capacities and jaw openings available on request.

Application
- Designed for lifting and transporting steel beams, profiles and structural components.
- Suitable for lifting beams from the sides or from the ends.

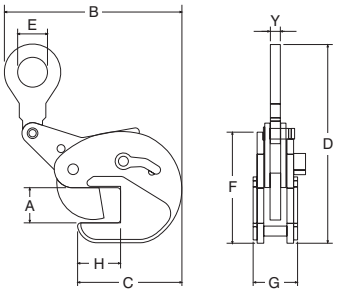

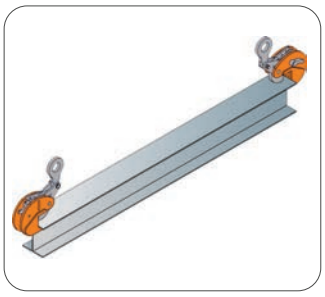

Type	WLL (kg)	Jaw opening (mm)	A (mm)	B (mm)	C (mm)	D (mm)	E (mm)	F (mm)	G (mm)	H (mm)	Y (mm)	Weight (kg)	Article number
COBK-2.0	2.000	3-20	3-20	285	157	295	64	155	67	65	17	19,0	**3313022**

Rema CBU bulb lifting clamp



The Rema CBU bulb lifting clamp is fitted with two pivots and a universal lifting eye.

Features
- Fitted with two pivots and a universal lifting eye.
- Minimum load 10% of WLL.

Application
- Specially developed for lifting and transporting HP profiles and ship structures that incorporate HP profiles. The material surface must not exceed 37 HRC / 345 HB hardness..

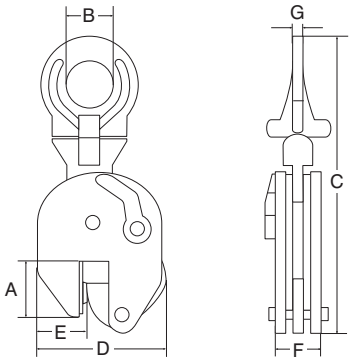

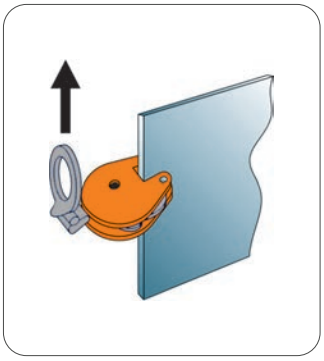

Type	WLL (kg)	Jaw opening (mm)	A (mm)	B (mm)	C (mm)	D (mm)	E (mm)	F (mm)	Weight (kg)	Article number
CBU-3.0	3.000	0-35	90	70	370	185	55	54	8,0	**3310001**
CBU-5.0	5.000	0-45	110	70	435	225	60	86	17,3	**3310003**

Rema CBL bulb lifting clamp



The Rema CBL bulb lifting clamp is equipped with three pivots for extra clamping force. The clamp can be locked in closed and open positions and has a built-in safety mechanism to prevent slipping.

Features
- Three pivots provide extra clamping force.
- Can be locked in closed and open positions.
- Equipped with a safety mechanism to prevent slipping when lifting or lowering.

Application
- Designed for safe lifting and placing of HP profiles.
- Particularly suitable for shipbuilding.
- Minimum load 10% of WLL.

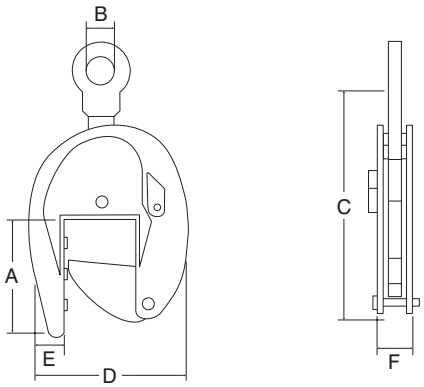

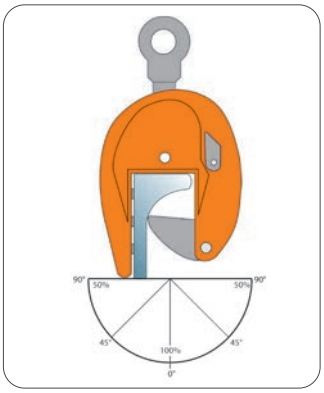

Type	WLL (kg)	Jaw opening (mm)	A (mm)	B (mm)	C (mm)	D (mm)	E (mm)	F (mm)	Weight (kg)	Article number
CBL-1.5	1.500	0-80	205	70	520	280	66	64	20,0	**3313017**

Rema CDK sheet-pile clamp



The Rema CDK clamp is designed for safe lifting and moving of sheet piles. Capacity is 3,000 kg per pair; clamps must always be used in pairs.

Features
- Capacity 3,000 kg per pair.
- Always use in pairs.

Application
- Specifically developed for safe lifting and transporting of sheet piles.

Options
- Optional shackle available (art. no. 3011011).



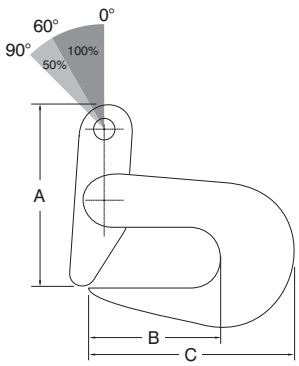

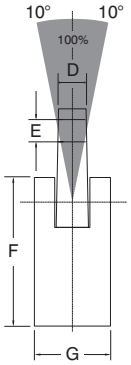

Type	WLL (kg)	Jaw opening (mm)	A (mm)	B (mm)	C (mm)	D (mm)	E (mm)	F (mm)	G (mm)	Weight (kg)	Article number
CDK-3.0	3.000/2	0 - 20	185	80	140	15	25	115	65	7,6	**3313023**

Rema CRC rail clamp



The Rema CRC rail clamp is designed for vertical transport of rail profiles..

Features

- Lifting capacity and jaw opening are clearly engraved on the clamp body.
- Equipped with a safety mechanism that prevents the rail from slipping out of the clamp during transport.
- Clamp can be locked in open and closed positions.

Application

- For vertical lifting and handling of rail profiles used in railway construction or maintenance.

Options

- Other capacities and jaw openings, as well as custom profile dimensions, are available on request.

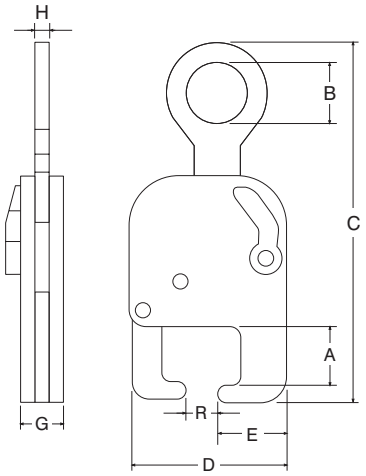

Type	WLL (kg)	Jaw opening R (mm)	A (mm)	B (mm)	C (mm)	D (mm)	E (mm)	G (mm)	H (mm)	Weight (kg)	Article number
CRC-1.5	1.500	40-75	64	65	390	170	70	48	16	8,0	**3314015**

Superclamp R1 and R2 rail clamp

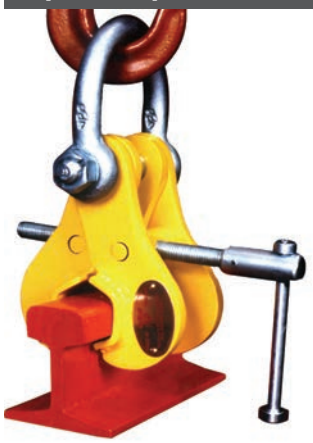

The Superclamp R1 and R2 adjustable lifting clamps are designed for rail profiles.

Features

- Robust, adjustable design for various rail sizes.
- Suited to rail construction, maintenance and manufacturing activities.

Application

- Used in railway construction, maintenance and fabrication to securely lift and handle rail sections.

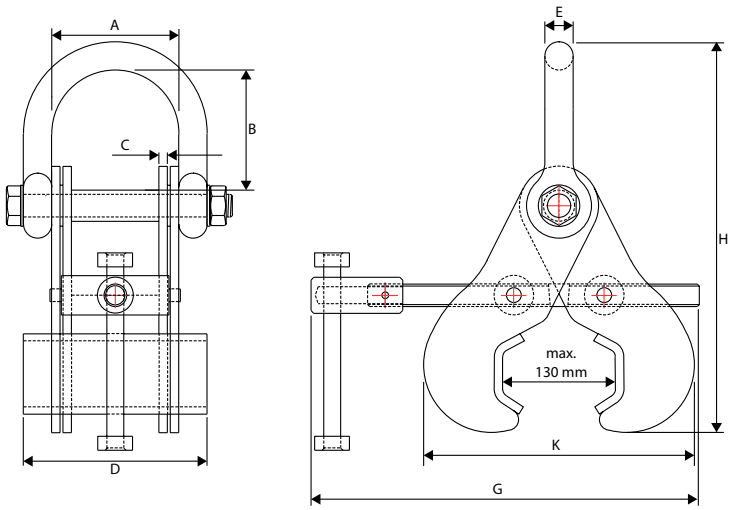

Type	WLL (kg)	Jaw opening (mm)	Max. flange width (mm)	A (mm)	B (mm)	C (mm)	D (mm)	E (mm)	G (mm)	H (mm)	K (mm)	Weight (kg)	Article number
R1	3.000	113	114	90	85	6,0	130	20	275	277	192	6,0	**3510001**
R2	5.000	113	178	116	110	12,5	130	25	275	311	192	9,5	**3510003**

Rema CPH pipe lifting hook



The Rema CPH pipe clamp is fitted with TBK plastic coating; supplied and used in pairs.

Features
- With TBK plastic coating.
- Clamps are supplied and used in pairs.

Application
- For efficient and easy lifting and moving of pipes.

Standard delivery
- Fasteners are not included.

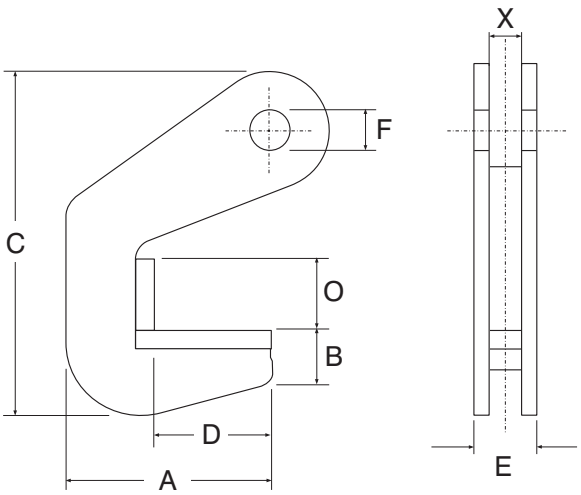

Type	WLL (kg)	Jaw opening O (mm)	A (mm)	B (mm)	C (mm)	D (mm)	E (mm)	F (mm)	X (mm)	Weight (kg)	Article number
CPH-1.5	1.500/2	40	120	32	185	70	41	16	23	3,2/2	**3313025**
CPH-3.0	3.000/2	40	120	32	185	70	41	16	23	3,2/2	**3313027**
CPH-4.0	4.000/2	50	140	58	180	70	41	26	23	6,0/2	**3313029**
CPH-6.0	6.000/2	50	140	58	180	70	41	26	23	6,0/2	**3313031**
CPH-8.0	8.000/2	70	140	58	200	70	45	26	25	7,2/2	**3313033**
CPH-10.0	10.000/2	70	140	58	200	70	86	26	44	10,0/2	**3313034**
CPH-12.0	12.000/2	70	140	58	200	70	86	26	44	12,0/2	**3313035**
CPH-15.0	15.000/2	70	155	75	250	70	100	26	59	18,0/2	**3313037**
CPH-20.0	20.000/2	70	155	75	250	70	100	26	59	20,0/2	**3313039**

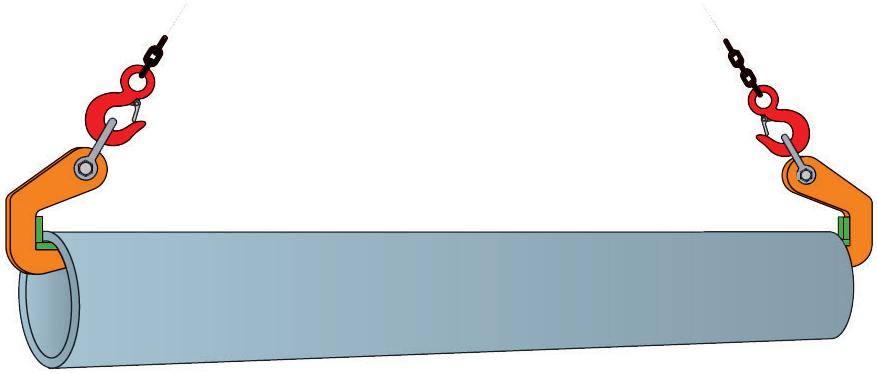

Rema CRK pipe lifting clamp



The Rema CRK pipe clamp is specially developed for lifting pipes and round materials.

Features

- For lifting and moving pipes and round materials.

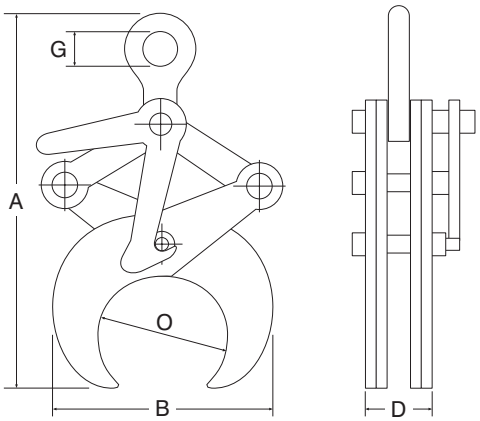

Type	WLL (kg)	O min-max (mm)	A min-max (mm)	B min-max (mm)	D (mm)	G (mm)	Weight (kg)	Article number
CRK-0.5	500	49-114	300-400	146-207	47	45	4,5	**3311001**
CRK-1.0	1.000	114-219	430-615	110-170	47	45	9,0	**3311003**
CRK-2.0	2.000	219-368	670-955	225-320	56	65	31,0	**3311005**
CRK-3.0	3.000	368-508	875-1165	590-710	56	65	39,0	**3311007**

Rema CBKN block lifting clamp



The Rema CBKN block clamp is designedfor lifting and transporting various products and materials with parallel surfaces.

Features

- Clamping jaws are covered with wear-resistant plastic to prevent damage.
- Clamp opens automatically when the load is set down.
- Always used as a single clamp (not in pairs).

Application

- For lifting and transporting products with parallel sides, such as blocks or panels.

Important:
The surface roughness of the material to be lifted must be at least 25 µm.

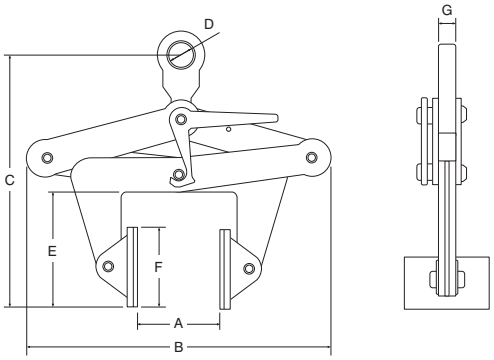

Type	WLL (kg)	Jaw opening (mm)	B (mm)	C (mm)	D (mm)	E (mm)	F (mm)	G (mm)	Weight (kg)	Article number
CBKN-0.5	500	30-110	270-325	305-460	45	95	80 x 70	15	7,0	**3312013**
CBKN-1.0	1.000	100-230	425-530	380-655	45	120	80 x 70	15	12,0	**3312015**
CBKN-2.0	2.000	220-360	580-675	410-735	45	140	80 x 70	15	18,0	**3312017**
CBKN-3.0	3.000	350-500	725-835	530-900	65	178	100 x 90	16	32,0	**3312019**

Rema RBH lifting clutch



The Rema RBH lifting clutch is used for lifting prefab concrete slabs.

Features

- Special head geometry provides a secure lifting point.
- Suitable for prefab concrete elements.

Application

- Used for lifting and positioning prefab concrete slabs.

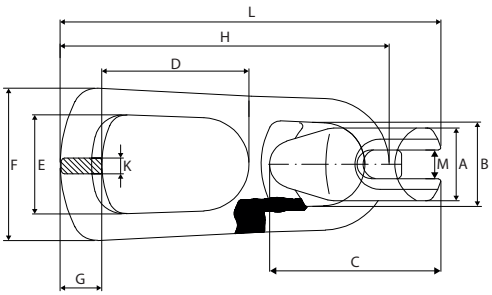

Type	WLL (kg)	B.F. (KN)	A (mm)	B (mm)	C (mm)	D (mm)	E (mm)	F (mm)	G (mm)	H (mm)	K (mm)	L (mm)	M (mm)	Weight (kg/st/m)	Article number
RBH-1.3	1.300	51.0	34	42,0	80,4	70,5	45,0	73	20,5	157,0	12,5	186	11,5	0,89	**3010101**
RBH-2.5	2.500	98.0	42	49,0	99,0	85,0	57,0	88	27,0	190,0	14,0	227	16,0	1,30	**3010103**
RBH-5	5.000	196.0	55	70,0	133,0	88,0	69,0	110	35,0	233,0	18,0	282	22,0	3,24	**3010105**
RBH-10	10.000	392.0	74	92,0	176,0	116,0	83,0	161	51,0	336,5	27,0	391	30,0	10,01	**3010107**
RBH-20	20.000	784.0	110	114,5	228,0	133,5	107,5	182	77,0	437,0	31,0	497	42,0	20,37	**3010109**

Rema-10 concrete hook chain sling assembly



Rema-10 concrete hook set designed for lifting concrete components with 55 × 25 mm steel lifting tubes.

Includes:

- 1 x RML-86-G10 master link (Art. No. 2631006).
- 2 x 0.5 m 6 × 18 mm REMA-10 chain legs (Art. No. 2610006).
- 4 x C-link connectors (Art. No. 2636006).
- 2 x G4163-½" shackles (Art. No. 3012009).
- 1 x concrete hook set (Art. No. 2640001).

Type	WLL (kg)	Article number
REMA-10 CONCRETE HOOK CHAIN ASSY. 1500 KG	1.500	**2629010**

Rema CBA vertical concrete pipe clamp



The Rema CBA concreete pipe clamp is specially designed for safe lifting of concrete pipe sections in vertical positions.

Features

- Always used in a set of three clamps.

Application

- For lifting concrete pipes or sections vertically.

Option

- Optional chain assembly: Rema-10 three-legged chain sling (art. no. 2693108-1.5).

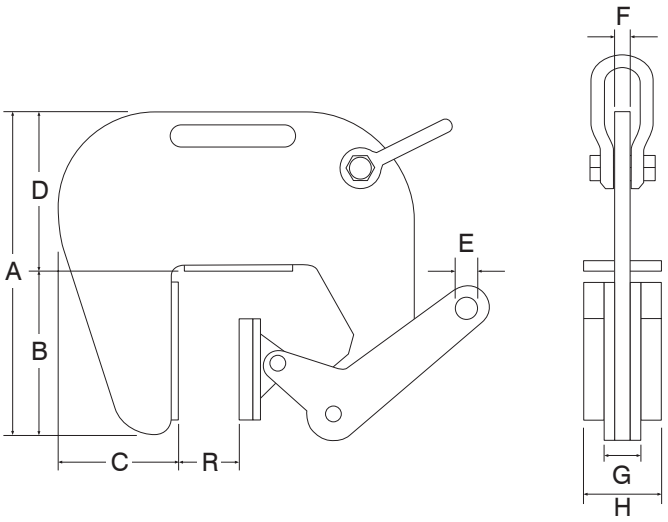

Type	WLL/3 (kg)	Jaw opening (mm)	A (mm)	B (mm)	C (mm)	D (mm)	E (mm)	F (mm)	G (mm)	H (mm)	R (mm)	Weight/3 (kg)	Article number
CBA-1.5	1.500/3	60-120	320	170	110	160	12	12	40	60	60-120	30,0/3	**3308007**
CBA-3.0	3.000/3	60-120	320	170	110	160	12	12	40	60	60-120	30,0/3	**3308008**

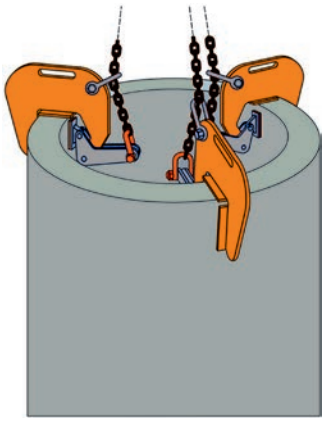

Rema PK/MK compact hand magnet



Type PK



Type MK

Rema PK and MK hand magnet is an indispensable tool in areas where steel plates are frequently handled.

Features
- GS certified.
- Robust ergonomic handle with plastic coating.
- Easy release by pressing down the handle; the leaf spring pushes the magnet off without damaging the workpiece.
- Workpieces are not magnetised after release.
- PK type has a plastic housing.

Application
- Carrying bare steel plates horizontally or vertically from stock to the workstation.
- Safely manoeuvring steel plates on machine tools.
- Lifting and transporting steel plates after cutting.

ATTENTION
The full lifting capacity is only then achieved on sheet with a smooth, flat and clean surface, with sufficient thickness and made of low-alloy, low-carbon steel. On a surface with mill scale, only approx. 1/3 of the lifting capacity is achieved!

Type	WLL (kg)	Pull force (kg)	Plate thickness (mm)	L x W (mm)	Weight (kg)	Article number
PK-60	60	35	1-2	160 x 150	1,4	**3604000**
MK-120	120	70	1-2	140 x 84	1,4	**3604001**
MK-170	170	100	1-4	140 x 116	1,7	**3604003**
MK-300	300	180	>2	160 x 180	3,5	**3604005**

Rema MK-KS compact crane magnet



The Rema MK-PS compact crane magnet is desiged with a tiltable lifting eye. Used in situations requiring high safety or where the surface is not perfectly smooth or clean.

Features
- Tiltable lifting eye.
- Suitable where high safety requirements apply.
- Suitable for plates that are not perfectly clean or flat.

Application
- For lifting steel plates in environments with strict safety requirements or where surfaces may be oily or uneven.

Important
- Full lifting force is achieved only when the steel surface is machined, smooth and clean.
- Never exceed the safe working load.
- Hand magnets have a safety factor of 2 and crane magnets have a safety factor of 3.
- Never stand under the load of a crane magnet.

Type	WLL (kg)	Pull force (kg)	Plate thickness (mm)	L x W (mm)	Weight (kg)	Article number
MK-250KS	250	100	>4	290 x 125	7,5	**3604007**
MK-500KS	300	125	>4	290 x 180	10,5	**3604009**

Rema PFR permanent lifting magnet



The Rema PFR permanent lifting magnet uses neodymium magnetic material, resulting in very powerful magnets relative to their own weight and dimensions. Suitable for both round and flat workpieces.

Features
- Safety factor 3.
- Powerful neodymium magnet material.
- Very high lifting capacity.
- Simple operation with light mechanical switching and safety lever.
- Large lifting eye.
- Compact design and low self-weight.
- Robust construction of housing and magnet.

Application
- Lifting workpieces in workshops, warehouses and at machines such as shears, milling machines, grinders, saws, bending and turning lathes.

Option
- Optional tilt arm for PFR 250 and PFR 500 available.

Type	WLL (kg)	WLL round material (kg)	Material thickness (mm)	Maximum plate size (L x W) (mm)	Dimensions L x W x H (mm)	Diameter range (mm)	Weight (kg)	Article number
PFR-125	125	50	25	1900 x 500	95 x 60 x 110	50-100	3,0	**3601004**
PFR-250	250	125	30	1750 x 1000	151 x 100 x 168	60-200	10,0	**3601005**
PFR-500	500	250	40	1800 x 1500	246 x 120 x 168	65-270	19,0	**3601007**
PFR-1000	1.000	500	60	2450 x 1500	316 x 148 x 216	100-300	37,0	**3601009**
PFR-1500	1.500	750	60	2450 x 1500	410 x 165 x 253	150-350	50,0	**3601010**
PFR-2000	2.000	1.000	80	3250 x 1500	480 x 165 x 251	100-350	85,0	**3601011**

Rema HA tilting arm (for PFR magnets)



The Rema HA tilting arm is an accessory for PFR magnets, used for lifting and tilting steel plates up to 500 kg from horizontal to vertical.

Features
- HA-250 for plates 250 – 800 mm wide and 200 – 1,500 mm long.
- HA-500 for plates 250 – 1,000 mm wide and 250 – 2,000 mm long.

Application
- For tilting steel plates in warehouses and workshops.



Type	WLL (kg)	Dimensions L x W x H (mm)	Weight (kg)	Article number
HA-250	250	958 x 210 x 250	17,0	**3601013**
HA-500	500	1158 x 210 x 500	19,0	**3601015**

PFR load capacity table





Safe lifting capacity for flat plates (S 235 JR (ST-37))

Type	Material thickness (mm)	Clean and ground surface air gap 0.1 mm			Rusty / hot rolled surface air gap 0.1 – 0.3 mm			Irregular and rough surface air gap 0.3 – 0.5 mm			Very rough surface air gap > 0.5 mm
		Max. plate size (mm)	WLL (kg) for the plate dimensions below		Max. plate size (mm)	WLL (kg) for the plate dimensions below		Max. plate size (mm)	WLL (kg) for the plate dimensions below		
PFR 125		(L x W)	L > 200 B > 200	L > 60 B > 100	(L x W)	L > 200 B > 200	L > 60 B > 100	(L x W)	L > 200 B > 200	L > 60 B > 100	
	≥ 25	-	125	110	-	75	70	-	60	55	
	15	1900 x 500	115	100	1100 x 500	70	60	900 x 500	55	45	
	10	2300 x 500	110	65	1500 x 500	65	50	1200 x 500	50	40	
	4	2500 x 500	45	17	2300 x 500	40	17	1700 x 500	30	15	
	2	1500 x 500	15	4	1300 x 500	13	3	1200 x 500	12	3	
	Ø 50-100	Lmax 2500	40		Lmax 1700	28		Lmax 1700	24		
PFR 250		(L x W)	L > 300 B > 300	L > 100 B > 150	(L x W)	L > 300 B > 300	L > 100 B > 150	(L x W)	L > 300 B > 300	L > 100 B > 150	ask for advice
	≥ 30	-	250	225	-	170	150	-	105	100	
	15	1750 x 1000	205	155	1250 x 1000	150	120	1000 x 800	90	85	
	10	2200 x 1000	170	80	1650 x 1000	130	65	1100 x 1000	85	53	
	6	2100 x 1000	100	34	1650 x 1000	80	28	1300 x 1000	60	23	
	4	1600 x 1000	50	17	1400 x 1000	45	14	1150 x 1000	36	12	
	Ø 60-200	Lmax 3500	125		Lmax 3000	100		Lmax 2500	70		
PFR 500		(L x W)	L > 400 B > 400	L > 110 B > 245	(L x W)	L > 400 B > 400	L > 110 B > 245	(L x W)	L > 400 B > 400	L > 110 B > 245	
	≥ 40	-	500	480	-	380	370	-	255	250	
	20	1800 x 1500	425	365	1650 x 1250	320	290	1400 x 1000	220	200	
	15	2250 x 1500	400	235	2050 x 1250	300	195	1750 x 1000	205	150	
	10	2500 x 1500	270	115	2350 x 1250	220	95	2150 x 1000	165	80	
	8	2300 x 1500	195	80	2250 x 1250	160	65	2150 x 1000	125	55	
	6	2000 x 1500	125	50	2000 x 1250	100	40	2000 x 1000	80	33	
	Ø 65-270	Lmax 4000	250		Lmax 3500	200		Lmax 3000	150		
PFR 1000		(L x W)	L > 500 B > 500	L > 145 B > 310	(L x W)	L > 500 B > 500	L > 145 B > 310	(L x W)	L > 500 B > 500	L > 145 B > 310	
	≥ 60	-	1000	985	-	845	835	-	650	645	
	30	2450 x 1500	860	710	2000 x 1500	730	620	1900 x 1250	565	515	
	25	2850 x 1500	830	535	2400 x 1500	705	475	2250 x 1250	550	410	
	20	3200 x 1500	745	365	2750 x 1500	640	320	2600 x 1250	510	290	
	15	3300 x 1500	500	215	2900 x 1500	445	195	2800 x 1250	380	175	
	10	2750 x 1500	265	105	2550 x 1500	240	95	2650 x 1250	200	85	
	Ø 100-300	Lmax 4500	500		Lmax 4000	400		Lmax 3500	300		
PFR 1500		(L x W)	L > 800 B > 800	L > 170 B > 400	(L x W)	L > 800 B > 800	L > 170 B >400	(L x W)	L > 800 B > 800	L > 145 B > 310	
	≥80	-	1500	1460	-	1420	1200	-	1020	980	
	50	3000 x 1200	1460	1250	2500 x 1200	1200	1050	2000 x 1200	960	900	
	30	3500 x 1200	980	430	3250 x 1200	900	390	2500 x 1300	780	350	
	20	3500 x 1400	760	310	3000 x 1600	750	290	2500 x 1750	695	270	
	15	3000 x 1500	540	195	3000 x 1500	530	180	2500 x 1400	420	160	
	Ø 150-350	Lmax 5000	750		Lmax 4500	700		Lmax 3500	600		
PFR 2000		(L x W)	L > 800 B > 800	L > 170 B > 500	(L x W)	L > 800 B > 800	L > 170 B > 500	(L x W)	L > 800 B > 800	L > 170 B > 500	
	≥ 80	-	2000	1950	-	1650	1600	-	1300	1250	
	50	3250 x 1500	1950	1600	2500 x 1500	1600	1350	2000 x 1500	1250	1150	
	30	3500 x 1500	1350	550	3250 x 1500	1150	500	2500 x 1500	1000	450	
	20	3500 x 2000	1100	400	3000 x 2000	1000	375	2500 x 2000	900	350	
	15	3000 x 1500	650	250	3000 x 1500	600	230	2000 x 1500	550	200	
	Ø 100-350	Lmax 5000	1000		Lmax 4500	900		Lmax 4000	800		

Rema QPM permanent lifting magnet



The Rema QPM neodymium lifting magnet is suitable for lifting and transporting flat and cylindrical ferromagnetic materials.

Features

- Safety factor 3.5.
- High-quality neodymium magnet material (NdFeB).
- Virtually no residual magnetism after release.
- Easy handle operation with safety button.
- V-groove allows lifting cylindrical as well as flat workpieces.
- Compact, robust design with large lifting eye.

Application

- For horizontal and vertical transport in warehouses, construction workshops, machine and assembly halls and yards. Always choose the magnet according to the load (thickness, weight, size, material, surface condition, air gap, and symmetry).

Important

- Never exceed the safe working load.
- Avoid shock loads.
- Maximum lifting force is achieved only when the surface is machined, smooth and clean.
- Lift one plate at a time, avoid peeling effect on thin plates, and follow safety precautions.
- Annual inspection by a competent person is recommended.

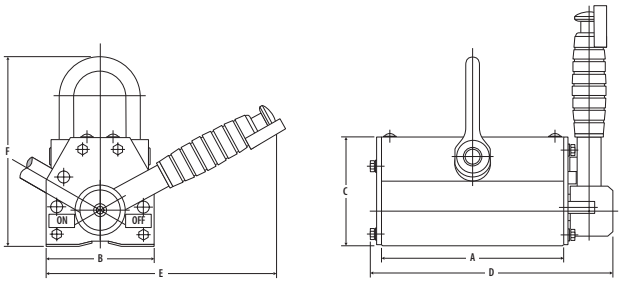

Type	WLL (kg)	A (mm)	B (mm)	C (mm)	D (mm)	E (mm)	F (mm)	handle length (mm)	Weight (kg)	Article number
QPM-100	100	84	62	67	130	150	116	84	2,6	**3610001**
QPM-300	300	154	92	91	206	195	160	154	9,6	**3610003**
QPM-600	600	224	122	117	285	254	213	196	23,0	**3610006**
QPM-1000	1.000	250	176	163	322	372	288	264	54,0	**3610010**

QPM load capacity table

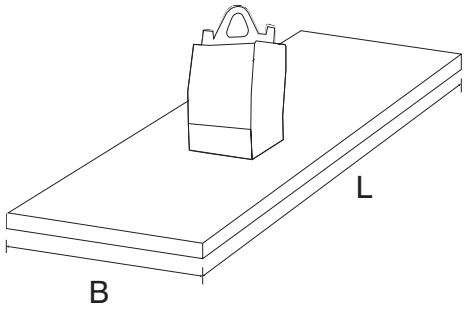

Safe lifting capacity for flat plates (S 235 JR (ST-37))

Type	Material thickness (mm)	Clean and ground surface air gap 0.1 mm			Rusty / hot rolled surface air gap 0.1 – 0.3 mm			Irregular and rough surface air gap 0.3 – 0.5 mm		
		Max. plate size (mm)	WLL (kg) for the plate dimensions below		Max. plate size (mm)	WLL (kg) for the plate dimensions below		Max. plate size (mm)	WLL (kg) for the plate dimensions below	
		(L x W)	L > 150 B > 150	L > 62 B > 116	(L x W)	L > 150 B > 150	L > 62 B > 116	(L x W)	L > 300 B > 300	L > 92 B > 192
QPM-100	≥ 20	-	100	80	-	50	46	-	-	-
	15	800 x 600	88	60	700 x 500	45	40	-	-	-
	10	500 x 400	55	40	400 x 300	35	30	-	-	-
	4	300 x 300	20	12	300 x 300	18	10	-	-	-
	Ø 70	Lmax 1000	30		-	-		-	-	
QPM-300	≥ 30	-	300	216	-	150	145	-	108	108
	15	1500 x 1500	264	168	1000 x 700	138	126	1000 x 700	102	95
	10	2000 x 1500	204	108	1500 x 1000	132	78	1000 x 1000	96	66
	5	2000 x 1000	114	36	1500 x 1000	78	30	1000 x 1000	66	24
	Ø 90	Lmax 2000	100		-	-		-	-	
QPM-600	≥ 40	-	600	480	-	380	330	-	282	244
	20	2000 x 1500	560	370	1500 x 1200	350	290	1400 x 1000	264	228
	10	2000 x 1500	318	132	2000 x 1250	240	108	1500 x 1000	198	96
	8	2000 x 1500	260	100	2000 x 1300	215	83	1500 x 1000	168	78
	Ø 110	Lmax 2600	200		Lmax 2000	160		Lmax 1500	120	
QPM-1000	≥ 60	-	1000	995	-	810	790	-	640	605
	30	2000 x 1500	965	515	2000 x 1400	780	450	2100 x 1100	620	400
	25	2100 x 1800	880	390	2000 x 1600	720	340	2000 x 1000	590	305
	20	2100 x 1800	715	270	2000 x 1600	600	230	2000 x 1100	510	215
	15	2000 x 1600	375	155	2000 x 1400	350	145	1700 x 1100	325	135
	10	2000 x 1600	270	80	2000 x 1400	230	70	1600 x 1100	215	70
	Ø 120	Lmax 3400	300		-	-		-	-	

Rema RM battery lifting magnet



The Rema RM battery magnet with built-in 12 V battery is suitable for lifting flat and round materials (type RMP for round).

Features

- 12 V battery provides at least 8 hours of operation.
- Infrared remote control up to 4.5 m.
- Direct connection to 230 V for charging.
- LED indicator for battery voltage.
- RM version is three-pole; RMP version is two-pole.
- Additional push button under the lifting eye prevents the magnet being switched off unintentionally.
- Two buttons must be pressed to release the plate.
- Acoustic alarm and LED light warn of low battery voltage; magnet cannot be switched on when the battery is low.
- Proof tested at 2 × working load.
- Battery type according to DIN 43539-3.

Application

- For lifting heavy, thick plate material up to 5,000 kg.
- RMP type also suitable for round materials with diameter between 25 mm and 300 mm.

Type	WLL (kg)	WLL round material (kg)	Material thickness (mm)	Maximum plate size (L x W) (mm)	Dimensions L x W x H (mm)	Weight (kg)	Article number
RM-1350	1.350	-	38	2130 x 2130	272 x 242 x 460	60,0	**3601031**
RM-2500	2.500	-	50	2400 x 2400	400 x 242 x 460	72,0	**3601033**
RM-3600	3.600	-	25	6000 x 3000	1050 x 240 x 460	180,0	**3601035**
RM-5000	5.000	-	50	3600 x 3300	1200 x 300 x 460	203,0	**3601037**
RMP-1800	1.800	1.130	50	2000 x 2000	470 x 242 x 610	167,0	**3601041**
RMP-3600	3.600	2.260	70	2700 x 2700	760 x 262 x 620	420,0	**3601043**

RM load capacity table

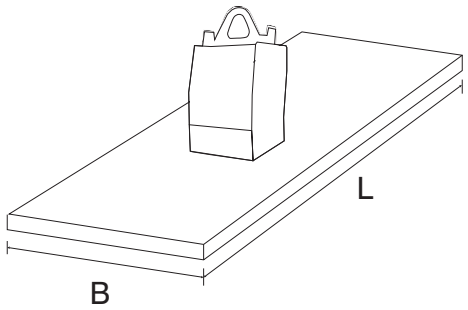

Type	Material thickness (mm)	Clean and ground surface air gap 0.1 mm		Rusty / hot rolled surface air gap 0.1 – 0.3 mm		Irregular and rough surface air gap 0.3 – 0.5 mm		Very rough surface air gap > 0.5 mm
		Max. plate size (L x B) (mm)	WLL (kg)	Max. plate size (L x B) (mm)	WLL (kg)	Max. plate size (L x B) (mm)	WLL (kg)	
RM 1350	≥38	2130 x 2130	1350	1900 x 1900	1160	1700 x 1700	900	Ask for advice
	25	2130 x 2130	950	1830 x 1830	890	1830 x 1520	770	
	19	2130 x 2130	660	1830 x 1830	580	1830 x 1520	500	
	13	2130 x 2130	370	1830 x 1830	340	1520 x 1520	290	
	10	1830 x 1520	180	1520 x 1520	160	1520 x 1520	150	
	6	1220 x 1220	90	1220 x 1220	86	1220 x 1220	80	
RM 2500	≥50	2400 x 2400	2500	2400 x 2100	2100	2100 x 2100	1750	
	38	2400 x 2400	1850	2400 x 2100	1620	2100 x 2100	1350	
	25	2400 x 2400	1200	2400 x 2100	1130	2100 x 2100	950	
	19	2400 x 2400	800	2100 x 2100	700	2100 x 1800	610	
	13	1800 x 1800	370	1800 x 1800	360	1800 x 1800	330	
	10	1800 x 1500	250	1800 x 1800	200	1800 x 1500	180	
	6	1500 x 1200	110	1500 x 1200	100	1500 x 1200	90	
RM 5000	≥50	3600 x 3300	5000	3300 x 3300	4200	3000 x 2700	3500	
	38	3300 x 3300	3700	3300 x 3000	3240	3000 x 2700	2700	
	25	3300 x 3300	2400	3300 x 3000	2260	3000 x 2700	1900	
	19	3000 x 2700	1600	3000 x 2700	1400	2700 x 2700	1220	
	13	2700 x 2400	740	2700 x 2400	720	2400 x 2400	660	
	10	2100 x 2100	500	2100 x 2100	400	2100 x 2100	360	
	6	1800 x 1800	220	1800 x 1800	200	1800 x 1800	180	
RM 3600	≥25	6000 x 3000	3600	6000 x 2700	3270	4500 x 3000	2730	
	19	6600 x 2400	2430	6000 x 2400	2230	4500 x 2400	1960	
	13	5100 x 2400	1250	4800 x 2400	1180	4500 x 2400	1090	
	10	3900 x 2400	720	3600 x 2400	660	3300 x 2400	610	
	6	3600 x 1800	340	3300 x 1800	300	3300 x 1500	270	
	3	2400 x 1800	110	2100 x 1800	100	1800 x 1800	90	
RMP 1800	≥50	2000 x 2000	1800	1700 x 1500	1030	1500 x 1500	930	
	38	1900 x 1900	1130	1800 x 1500	930	1800 x 1500	850	
	25	2100 x 2100	1020	2100 x 1800	840	2100 x 1800	760	
	19	2400 x 2100	800	2100 x 1800	660	2100 x 1800	590	
	13	2400 x 2100	570	2100 x 2100	470	2100 x 1800	420	
	10	2100 x 2100	390	2100 x 1800	310	2100 x 1500	270	
	6	2000 x 2000	250	2000 x 1500	200	1800 x 1500	150	
RMP 3600	≥70	-	3600	-	3400	-	3200	
	40	2700 x 2700	2275	2400 x 2400	2440	2400 x 2100	2320	
	30	3000 x 3000	1730	2700 x 2700	1570	2700 x 2400	1420	
	20	3000 x 3000	1250	2700 x 2700	1140	2700 x 2400	1050	
	15	3000 x 3000	920	2700 x 2700	840	2700 x 2400	780	
	10	2700 x 2700	610	2700 x 2400	580	2400 x 2400	520	
	6	3000 x 2700	370	2700 x 2400	350	2700 x 2400	320	

Rema VHM mechanical vacuum lifter



The Rema VHM mechanical vacuum lifter is ideal where no power source is available.

Features
- No energy source required.
- Quick and easy installation.
- Ergonomically handled by one person.
- Low maintenance.

Application
- For lifting non-porous plates where no power source is available.

Safety & options
- Safety bar to maintain sufficient distance between operator and load.
- Vacuum safety against accidental release.
- Acoustic signal for pressure loss powered by two 9 V batteries (non-rechargeable).
- Pressure gauge and vacuum control.
- Green/red LED indicator shows safe operation.
- Minimum load 3 kg.

Important
- Always provide the material specifications and dimensions (L × W × D) of the plate or workpiece to be lifted.


150/1

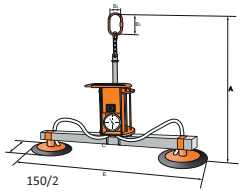
150/2

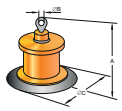
400/1 - 1200/1

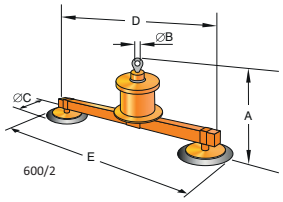

600/2

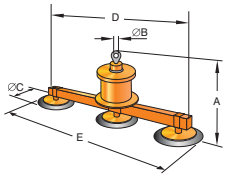

600/3

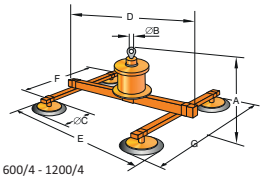

600/4 - 1200/4

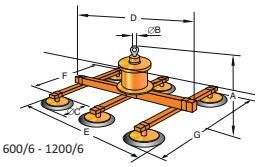

600/6 - 1200/6

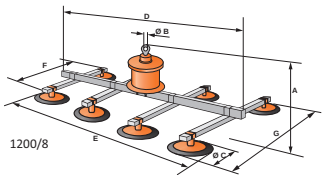

1200/8

Type	WLL (kg)	Number of suction cups	Thickness (mm) plate 1000 x 2000 mm	Thickness (mm) plate 1250 x 2500 mm	Thickness (mm) plate 1500 x 3000 mm	Weight (kg)	Article number
VHM-100/1	100	1	>5	-	-	17,0	**3665000**
VHM-150/2	150	2	>3	>5	-	26,0	**3665002**
VHM-400/1	400	1	>5	-	-	46,0	**3665001**
VHM-600/2	600	2	> 1	> 1.5	> 4	83,0	**3665003**
VHM-600/3	600	3	> 1	> 1	> 3	96,0	**3665005**
VHM-600/4	600	4	> 1	> 1	> 2	110,0	**3665007**
VHM-600/6	600	6	> 1	> 1	> 1	136,0	**3665008**
VHM-1200/1	1.200	1	>5	-	-	130,0	**3665010**
VHM-1200/4	1.200	4	> 1	> 1	> 2	188,0	**3665009**
VHM-1200/6	1.200	6	> 1	> 1	> 2	228,0	**3665011**
VHM-1200/8	1.200	8	> 1	> 1	> 2	266,0	**3665013**

Type	A min (mm)	A max (mm)	B (mm)	C (mm)	D max. (mm)	E min (mm)	E max (mm)	F (mm)	G min (mm)	G max (mm)
VHM-100/1	495	580	60x110	230	-	-	-	-	-	-
VHM-150/2	610	750	50	230	1230	470	1160	-	-	-
VHM-400/1	440	580	50	400	-	-	-	-	-	-
VHM-600/2	610	750	50	400	1910	860	2210	-	-	-
VHM-600/3	620	810	50	400	1910	1250	2210	-	-	-
VHM-600/4	690	880	50	340	1910	740	2140	1480	630	1740
VHM-600/6	690	880	50	280	1910	900	2080	1480	570	1680
VHM-1200/1	544	754	60	770	-	-	-	-	-	-
VHM-1200/4	800	1010	60	410	1910	950	2210	1200	850	1500
VHM-1200/6	800	1010	60	410	1910	1250	2210	1200	850	1500
VHM-1200/8	800	1010	60	410	1910	1250	2210	1200	850	1500

GLA electric vacuum lifter



The GLA vaccum lifter is developed for horizontal transport of non-porous, stable and flat plates of metal, plastic, etc. GLA types are powered by an electric vacuum pump.

Important:
Always provide the material specifications and dimensions (L × W × D) of the plate or workpiece to be lifted. Larger capacities or different specifications available on request.

Features

- GLA types also available with battery-powered vacuum pump.
- Battery includes charger.
- Manual rotation and tilting.
- Vacuum lifters for wood and stone available on request.
- Higher capacities on request.

Application

- For lifting non-porous plates where no power source is available.

Safety & options

- Vacuum safety against release.
- Acoustic signal for under-pressure.
- Safety bar for sufficient distance.
- Pressure gauge and vacuum control.
- Acoustic signal included.
- Rechargeable batteries and charger.

Advantages

- Ergonomic handling by one person and low maintenance.

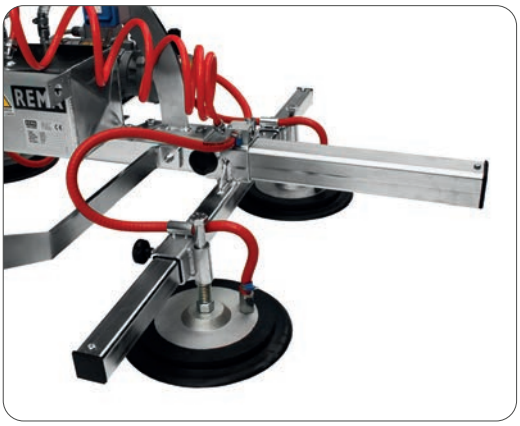

Type	WLL (kg)	Number of suction cups	Suction cup size (mm)	L x W (mm)	Overall height (mm)	Weight (kg)	Article number
GLA4F-0.25	250	4	250	1750 x 1150	620	55,0	**3660001**
GLA4F-0.5	500	4	300	1750 x 1150	620	55,0	**3660003**
GLA6F-0.5	500	6	250	2200 x 1200	620	90,0	**3660005**
GLA6F-1.0	1.000	6	300	2200 x 1200	620	90,0	**3660007**
GLA8F-1.0	1.000	8	250	2750 x 1150	620	150,0	**3660009**
GLA8F-1.5	1.500	8	300	2750 x 1150	620	150,0	**3660011**
GLA10F-2.0	2.000	10	300	2750 x 1150	620	200,0	**3660012**

VLA pneumatische vacuümheffer



The VLA vaccuum lifter is designed for horizontal transport of non-porous, stable and flat plates of metal or plastic. VLA types are powered pneumatically.

Important:
Always provide the material specifications and dimensions (L × W × D) of the plate or workpiece to be lifted. Larger capacities or different specifications available on request.

Features

- Battery with charger included.
- Manual rotation and tilting.
- Vacuum lifters for wood and stone available on request.
- Higher capacities on request.

Application

- For lifting non-porous plates where no power source is available.

Safety & options

- Vacuum safety against release.
- Acoustic signal for under-pressure.
- Safety bar for sufficient distance.
- Pressure gauge and vacuum control.
- Acoustic signal included.
- Rechargeable batteries and charger.
- Minimum air pressure required: 6–7 bar.

Advantages

- Ergonomic handling by one person and low maintenance.



Type	WLL (kg)	Number of suction cups	Suction cup size (mm)	L x W (mm)	Overall height (mm)	Weight (kg)	Article number
VLA4F-0.25	250	4	250	1750 x 1150	620	55,0	**3660013**
VLA4F-0.5	500	4	300	1750 x 1150	620	55,0	**3660015**
VLA6F-0.5	500	6	250	2200 x 1200	620	90,0	**3660017**
VLA6F-1.0	1.000	6	300	2200 x 1200	620	90,0	**3660019**
VLA8F-1.0	1.000	8	250	2750 x 1150	620	150,0	**3660021**
VLA8F-1.5	1.500	8	300	2750 x 1150	620	150,0	**3660023**

GP electric vacuum lifter for glass



The GP vacuum lifters for glass is developed for horizontal transport of glass plates. GP-RB types can be rotated and tilted manually.

Features
- GP models powered by electric vacuum pump.
- Electric rotation and tilting available; models offered in 230 VAC and 24 V DC.
- Larger tonnages and other specifications on request.

Application
- For horizontal transport of glass sheets; GP-RB types allow manual rotation and tilting.

Safety & options
- Vacuum safety against release.
- Acoustic signal for under-pressure.
- Safety bar for sufficient distance.
- Pressure gauge and vacuum control.
- Acoustic signal included with rechargeable batteries and charger.

Important:
Always provide the material specifications and dimensions (L × W × D) of the plate or workpiece to be lifted. Larger capacities or different specifications available on request.

Type	WLL (kg)	Number of suction cups	Suction cup size (mm)	L x W (mm)	Overall height (mm)	Weight (kg)	Article number
GP-2RB	200	2	300	300 x 750	510	55,0	**3661001**
GP-4RB	400	4	300	658 x 867	510	55,0	**3661003**
GP-6RB	600	6	300	756 x 1100	750	70,0	**3661005**
GP-8RB	800	8	300	756 x 1340	750	83,0	**3661007**

Traverses with two (2) fixed hooks



Fixed hooks

Spreader beam equipped with two (2) fixed hooks for lifting loads at two points.

Features
- Coating: zinc phosphate primer, RAL 2004 (orange).
- Tonnage indication.
- Black-yellow safety stripes at the ends.
- Fixed hooks with safety latch made of high-quality steel grade 10.

Application
- For lifting loads using two fixed lifting points; ideal for evenly distributing the load.

Options
- Painted in desired RAL colour.
- Other configurations on request.

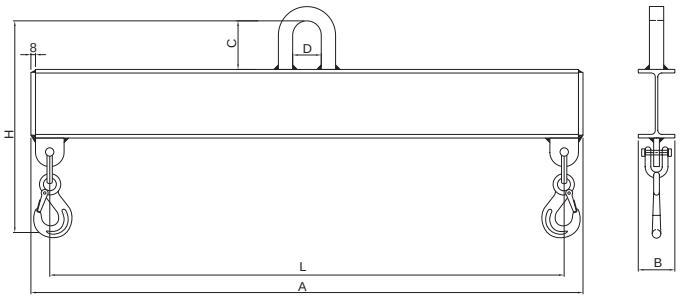

Type	WLL (kg)	A (mm)	B1 (mm)	C (mm)	D (mm)	H (mm)	L (mm)	Weight (kg)	Article number
TRA-VA-1000-1M	1.000	1070	65	85	55	380	1000	13,0	**3962001**
TRA-VA-1000-1.6M	1.000	1670	65	85	55	400	1600	22,0	**3962003**
TRA-VA-1000-2.4M	1.000	2400	75	85	55	420	2230	38,0	**3962005**
TRA-VA-1000-3,15M	1.000	3220	85	85	55	420	3150	57,0	**3962007**
TRA-VA-1600-1,6M	1.600	1690	75	85	55	480	1600	27,0	**3962009**
TRA-VA-1600-2,4M	1.600	2400	85	85	55	500	2210	55,0	**3962011**
TRA-VA-1600-3,15M	1.600	3240	90	85	55	520	3150	78,0	**3962013**
TRA-VA-1600-4M	1.600	4090	100	85	55	520	4000	98,0	**3962015**
TRA-VA-2500-2,4M	2.500	2400	90	85	70	540	2210	68,0	**3962017**
TRA-VA-2500-3,15M	2.500	3240	100	85	70	560	3150	111,0	**3962019**
TRA-VA-2500-4M	2.500	4090	110	85	70	580	4000	138,0	**3962021**
TRA-VA-2500-5M	2.500	5090	135	85	70	600	5000	198,0	**3962023**

Traverses with two (2) adjustable hooks



Adjustable hooks

Spreader beam with two (2) adjustable hooks, allowing flexible spacing between lifting points.

Features

- Coating: zinc phosphate primer, RAL 2004 (orange).
- Tonnage indication.
- Black-yellow safety stripes at the ends.
- Adjustable hooks with safety latch made of high-quality steel grade 10.

Application

- For lifting loads where the distance between lifting points needs to be adjustable.

Options

- Painted in desired RAL colour.
- Other configurations on request.

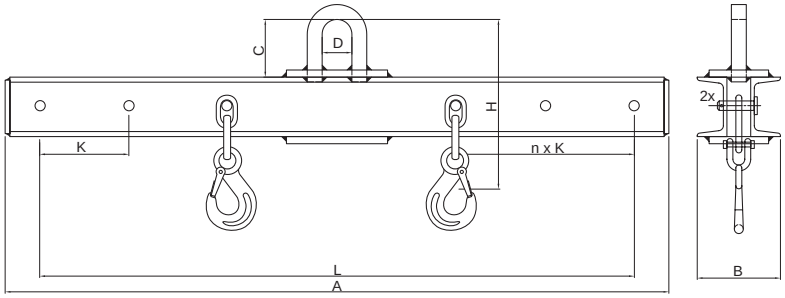

Type	WLL (kg)	A (mm)	B2 (mm)	C (mm)	D (mm)	H (mm)	L (mm)	n x k (mm)	Weight (kg)	Article number
TRA-VE-1000-1M	1.000	85	140	85	55	380	1000	2 x 150	30,0	**3962041**
TRA-VE-1000-1,6M	1.000	85	140	85	55	400	1600	3 x 150	40,0	**3962043**
TRA-VE-1000-2,4M	1.000	2400	160	85	55	420	2400	5 x 150	67,0	**3962045**
TRA-VE-1000-3,15M	1.000	85	170	85	55	420	3150	7 x 150	100,0	**3962047**
TRA-VE-1600-1,6M	1.600	85	150	85	55	480	1600	2 x 200	48,0	**3962049**
TRA-VE-1600-2,4M	1.600	2400	170	85	55	500	2400	4 x 200	83,0	**3962051**
TRA-VE-1600-3,15M	1.600	85	190	85	55	520	3150	5 x 200	120,0	**3962053**
TRA-VE-1600-4M	1.600	85	200	85	55	520	4000	7 x 200	171,0	**3962055**
TRA-VE-2500-2,4M	2.500	2400	180	85	70	540	2400	4 x 200	115,0	**3962057**
TRA-VE-2500-3,15M	2.500	85	200	85	70	560	3150	5 x 200	140,0	**3962059**
TRA-VE-2500-4M	2.500	85	220	85	70	580	4000	7 x 200	202,0	**3962061**
TRA-VE-2500-5M	2.500	85	240	85	70	600	5000	8 x 200	284,0	**3962063**

BBJ cross beam



Cross beam with four (4) welded hooks for stable suspension.

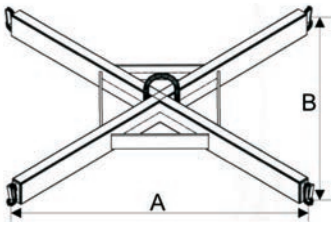

Features
- Four welded hooks with safety latch ensure stable suspension.
- Coated RAL 2004 (orange).
- Tonnage indication.
- Black-yellow safety stripes at the ends.

Type	WLL (kg)	A (mm)	B (mm)	Overall height (mm)	Lifting eye diameter (mm)	Weight (kg)	Article number
BBJ-1.0	1.000	800	800	150	25	21,0	**3963010**
BBJ-1.5	1.500	800	800	150	25	24,0	**3963015**
BBJ-2.0	2.000	800	800	200	25	29,0	**3963020**
BBJ-2.5	2.500	800	800	200	25	31,0	**3963025**

BBJR SS cross beam



Stainless steel AISI 316 construction

Ideal for lifting in corrosive environments or where stainless steel is required.

Stainless steel (AISI 316) cross beam with four (4) hooks for stable susper

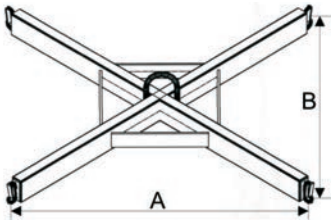

Features
- Four hooks with safety latch for stable suspension.
- Stainless steel AISI 316 construction.
- Tonnage indication.

Type	WLL (kg)	A (mm)	B (mm)	Overall height (mm)	Lifting eye diameter (mm)	Weight (kg)	Article number
BBJR-1.0	1.000	800	800	215	25	25,0	**3963110**
BBJR-1.6	1.600	800	800	230	25	30,0	**3963115**
BBJR-2.0	2.000	800	800	230	25	30,0	**3963117**

Recessed cross beam



Stainless steel version available on request

Recessed cross beam designed for safe and efficient lifting in applications with limited headroom requirements. Ideal for lifting operations where precision, safety, and maximum use of the available lifting height are essential.

Features
- Four hooks with safety latch.
- Coating RAL 2004 (orange).
- Tonnage indication.
- Black-yellow safety stripes at the ends.

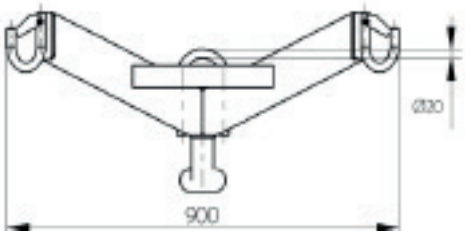

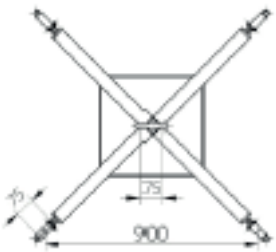

Type	WLL (kg)	Dimensions L × W (cm)	Weight (kg)	Article number
BBJR-VERDIEPT-1,5	1.500	900 x 900	30	**3963023**

Europallet spreader beam / lifter

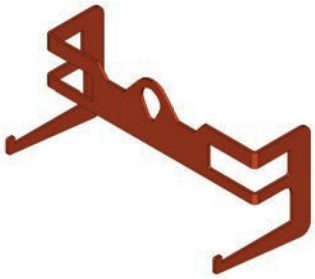

The Europallet spreader beam is a practical and reliable lifting device designed for the safe horizontal lifting of standard Europallets. Its robust construction ensures stable load handling while preventing damage to the pallet and its contents.

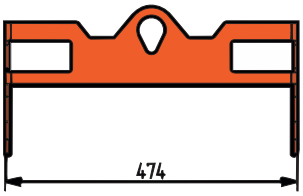

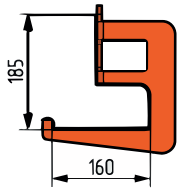

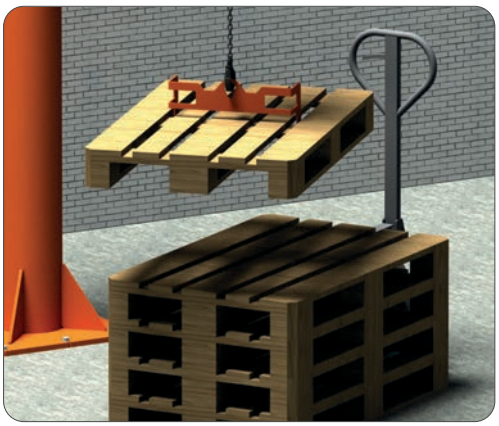

Special clamps on request

Contact Rema for advice or custom solutions

In addition to its standard product range, Rema designs and manufactures special lifting clamps tailored to specific customer requirements. These custom solutions are developed for applications where standard lifting equipment does not provide a safe or efficient solution.

Based on the load characteristics, dimensions and handling requirements, Rema delivers reliable custom-made clamps that meet applicable safety standards and operational demands.

Applications include

- Bales
- Beams
- Blocks
- Cylinders
- Crates
- Plates
- Profiles
- Rolls
- Drums
- Bags
- And similar loads





6

Information webbing slings	140
Polyester webbing slings and round slings	143
Protective sleeves	149
Re-line webbing slings	149
Round slings with chain components	151
Webbing sling hooks	154
Galvanized steel wire ropes	155
Information chain slings	158
REMA-10 chain slings	160
REMA-10 chain sling components	166
Information stainless steel chain slings	171
Stainless steel chain sling components	172
Lifting points	176
Bow, D-shackles and lifting hooks	187

Information about REMA webbing slings and round slings

All REMA webbing slings and round slings are equipped with a safety label and comply with the European Standards EN 1492-2 for round slings and EN 1492-1 for webbing slings.

Colour coding
Blue label Polyester (PES)
Orange label High Performance Polyethylene (HPPE)

Because the part of the label located above the stitching is sewn into the sling, the sling always remains traceable, even if the label becomes illegible, damaged, or torn off.

Polyester (PES)
Product range Webbing slings and round slings
Webbing / sleeve Colour and stripe coding for each working load limit
Label Blue
Characteristics Excellent UV resistance
High resistance to damage caused by elevated temperatures
High tensile strength relative to its own weight
Low elongation at safe working load
No loss of strength in wet conditions
Resistant to most acids
Characteristics Commonly used in almost all industries

High Performance Polyethyleen (HPPE)
Product range Coil round slings and protective sleeves
Webbing White, coloured, fitted with wear-indicator warning yarns
Label Orange
Characteristics Extremely high tensile strength relative to its own weight
Highly abrasion-resistant, approximately 7 times more durable than PES
Excellent resistance to cutting caused by sharp edges and corners
User-friendly, up to 8 times lighter than comparable steel slings
Long service life and suitable for intensive use
Resistant to alkalis and acids
Minimal elongation
Limitations Less suitable for high ambient temperatures
Application Lifting steel coils, natural stone, and other heavy, irregularly shaped loads with sharp edges

Important information regarding use

- The stated Working Load Limit (WLL) must never be exceeded.
- Avoid shock loading.
- Loads with sharp edges or rough surfaces must be protected using suitable protective equipment.
- Webbing slings must be used in such a way that they support the load over the full width.
- Webbing slings and round slings must be used in a manner that prevents the load from falling out.
- Never pull a webbing sling or round sling out from underneath a load while it is still resting on it.
- Never allow loads to fall onto webbing slings fitted with steel triangle fittings.
- Polyester webbing slings and round slings must never be used in alkaline environments.
- Polyamide webbing slings must never be used in acidic environments.
- Never use webbing slings or round slings outside the temperature range of -40 °C to +100 °C.
- For webbing slings with steel triangle fittings, a working temperature range of -20 °C to +100 °C applies.
- Inspect webbing slings and round slings before use.
- Never use worn or damaged webbing slings or round slings.
- Never use webbing slings or round slings with missing or illegible labels.
- Webbing slings and round slings must never be knotted.



Storage

- Preferably store in a dry, cool, and well-ventilated area.
- Protect against direct sunlight, weather influences, and aggressive substances.

Technical information

*** Decomposition may occur when exposed to concentrated sulphuric acid.**
Higher chemical concentrations and/or higher temperatures reduce the chemical resistance of the webbing material.

	PES – Polyester	HPPE – Polyethylene	PA – Polyamide
Tensile strength (gram/denier)	7-10 GPD	32-44 GPD	8-9 GPD
Soortelijk Weight (kg)	1.38	0.97	1.14
Elongation at WLL	3-4%	0.5-1%	6-8%
Elongation at break	12-18%	3.5-3.8%	15-28%
Moisture absorption	1% of own weight	0% of own weight	9% of own weight
Coefficient of friction	0.12-0.15	0.08	0.10-0.12
Operating temperature	-40°C - 100°C	-50°C - 60°C	-40°C - 100°C
Melting temperature	254-260°C	144-155°C	218-258°C
Buoyancy	No	Yes	No

Material	Acids	Alkalis	Ethers	Aldehydes	Alcohol	Oils	Organic solvents	Water & seawater
Polyester	* Yes	No	No	No	Yes	Yes	Yes	Yes
Polyamide	No	Yes	Yes	Yes	Yes	Yes	Yes	Yes
Polyethylene	Yes	Yes	Yes	Yes	Yes	Yes	Yes	Yes

* Limited resistance depending on concentration and temperature.



Rema Force | Round Slings for Heavy Loads

Material

Depending on the application, Rema Force round slings are available in three different versions. The core is always made of 100% Dyneema® fibres and the protective outer sleeve is available in three options:

- Special woven polyester sleeve with increased abrasion resistance
- Dyneema® light duty sleeve with high abrasion resistance
- Dyneema® heavy duty sleeve with extremely high cut and abrasion resistance

Properties

Dyneema® is a high-performance polyethylene fibre that combines maximum strength with minimal self-weight. Weight reduction compared to steel wire rope slings is approximately 80%.

Standards

- Rema Force round slings are manufactured in accordance with the Machinery Directive and are CE marked.
- Rema Force round slings are proof tested to 2 × WLL prior to delivery.

Applications

Rema Force round slings with heavy duty protective sleeves are specially developed for applications involving extreme abrasion and risk of cutting, such as lifting steel coils (fig. 2).

Rema Force round slings with light duty protective sleeves are used where high abrasion resistance is required while maintaining flexibility. Rema Force round slings with a polyester protective sleeve are applied where lower abrasion resistance is sufficient.

Rema Force lifting slings are exceptionally suitable for repetitive lifting operations due to their maximum strength and minimal self-weight.

Lower costs are achieved through reduced labour effort and time savings when attaching loads, as well as reduced hand and back strain, etc.



Fig. 1



Fig. 2



Fig. 3



Fig. 4



Fig. 5

Rema Force | Protective Sleeve

The most common damage to lifting slings and round slings is caused by cutting or extreme abrasion. By using Dyneema® protective sleeves, which act as a buffer between the load and the sling, the sling can be protected against cutting and/or abrasion. The sleeve can easily be slid over the sling. The Dyneema® sleeve provides 7 to 8 times better abrasion resistance than a polyester sleeve.

Two qualities available

1) DNLD flexible version provides very good protection against abrasion.
2) DNHD heavy duty version for extreme abrasion and very high resistance against cutting.

Available inner widths: 65, 75, 90, 115, 125, 145, 175, 205, 275 and 335 mm.

Rema Force | Edge Protector

The Dyneema® edge protectors are specially developed for Rema Force round slings from 8 t up to 115 t (fig. 5).
The Dyneema® edge protectors are used where there is a high risk of cutting. They are easy to install by means of a hook-and-loop fastening system.

Available inner widths: 125, 135, 155, 185, 230, 285, 345 and 460 mm.

WARNING!

- Movement of the load must be avoided at all times. Sliding of the load across the width of a lifting device can lead to severe cutting damage.

Rema S1 polyester flat webbing sling with reinforced eyes



Professional webbing sling, highly suitable for intensive industrial use.

Features

- Duplex sling; double-layer webbing.
- Extra strong, water- and dirt-repellent impregnated fabric ensures longer service life.
- Capacity stripes, each stripe represents 1 t (up to 10 t).
- Every 30 mm webbing width equals 1 t capacity.

Standard delivery

- Supplied individually packaged, including Rema instruction manual.
- Commissioning report included (Belgium).

Options

- Higher capacities available on request.
- Other lengths available on request.

Application

- Heavy-duty lifting in industrial environments.

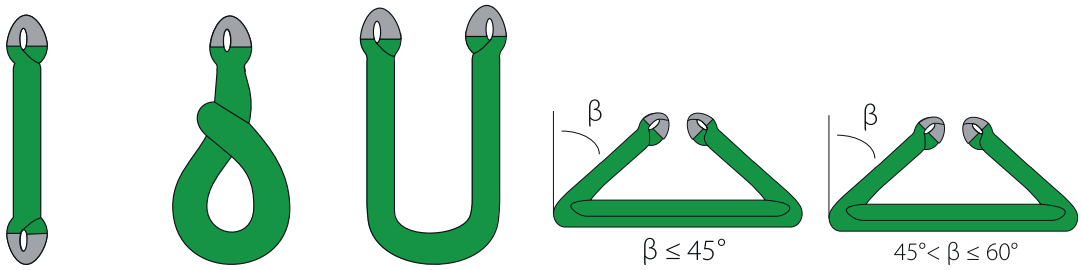

	WLL (kg)				
1.000 KG	1.000	800	2.000	1.400	1.000
2.000 KG	2.000	1.600	4.000	2.800	2.000
3.000 KG	3.000	2.400	6.000	4.200	3.000
4.000 KG	4.000	3.200	8.000	5.600	4.000
5.000 KG	5.000	4.000	10.000	7.000	5.000
6.000 KG	6.000	4.800	12.000	8.400	6.000
8.000 KG	8.000	6.400	16.000	11.200	8.000
10.000 KG	10.000	8.000	20.000	14.000	10.000

	1.000 KG	2.000 KG	3.000 KG	4.000 KG	5.000 KG	6.000 KG	8.000 KG	10.000 KG
Webbing width	**30 mm**	**60 mm**	**90 mm**	**120 mm**	**150 mm**	**180 mm**	**240 mm**	**300 mm**
Type/length	**Article number**	**Article number**	**Article number**	**Article number**	**Article number**	**Article number**	**Article number**	**Article number**
S1-PE-1M	1211031	1211061	1211091	-	-	-	-	-
S1-PE-1,5M	1211033	1211063	1211093	-	-	-	-	-
S1-PE-2M	1211035	1211065	1211095	1211125	1211155	-	-	-
S1-PE-3M	1211037	1211067	1211097	1211127	1211157	1211187	1211217	1211247
S1-PE-4M	1211039	1211069	1211099	1211129	1211159	1211189	1211219	1211249
S1-PE-5M	1211041	1211071	1211101	1211131	1211161	1211191	1211221	1211251
S1-PE-6M	1211043	1211073	1211103	1211133	1211163	1211193	1211223	1211253
S1-PE-7M	1211045	1211075	1211105	1211135	1211165	1211195	1211225	1211255
S1-PE-8M	1211047	1211077	1211107	1211137	1211167	1211197	1211227	1211257
S1-PE-9M	1211049	1211079	1211109	1211139	1211169	1211199	1211229	1211259
S1-PE-10M	1211051	1211081	1211111	1211141	1211171	1211201	1211231	1211261

Rema S2 endless flat polyester sling



Professional endless flat sling, suitable for intensive industrial lifting applications.

Features
- Simplex design.
- Capacity stripes, each stripe represents 1 t.
- Every 30 mm webbing width equals 1 t capacity.
- Available up to 10 t.

Standard delivery
- Supplied individually packaged, including Rema instruction manual.

Application
- Lifting applications requiring endless sling design.

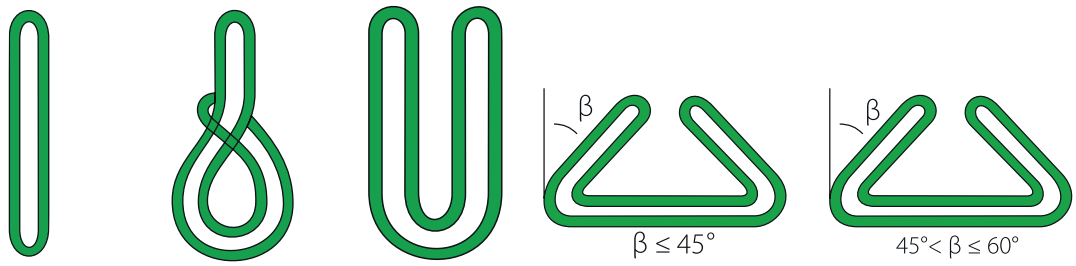

	WLL (kg)				
1.000 KG	1.000	800	2.000	1.400	1.000
2.000 KG	2.000	1.600	4.000	2.800	2.000
3.000 KG	3.000	2.400	6.000	4.200	3.000
4.000 KG	4.000	3.200	8.000	5.600	4.000
5.000 KG	5.000	4.000	10.000	7.000	5.000
6.000 KG	6.000	4.800	12.000	8.400	6.000
8.000 KG	8.000	6.400	16.000	11.200	8.000
10.000 KG	10.000	8.000	20.000	14.000	10.000

Type/length	Working length (m)	Circumference length (m)	1.000 KG	2.000 KG	3.000 KG
Webbing width			30 mm	60 mm	90 mm
			Article number	Article number	Article number
S2-PE-0,5M	0,5	1,0	1212031	1212061	1212091
S2-PE-1M	1,0	2,0	1212035	1212065	1212095
S2-PE-1,5M	1,5	3,0	1212037	1212067	1212097
S2-PE-2M	2,0	4,0	1212039	1212069	1212099
S2-PE-2,5M	2,5	5,0	1212041	1212071	1212101
S2-PE-3M	3,0	6,0	1212043	1212073	1212103
S2-PE-3,5M	3,5	7,0	1212045	1212075	1212105
S2-PE-4M	4,0	8,0	1212047	1212077	1212107
S2-PE-4,5M	4,5	9,0	1212049	1212079	1212109
S2-PE-5M	5,0	10,0	1212051	1212081	1212111

Rema S3 polyester sling with steel looping triangles



High-performance lifting sling equipped with steel looping triangles at both ends. Steel triangles reduce stress at sling eyes, improve load distribution, and resist deformation under heavy load. Ideal for vertical, basket and choke hitch applications.

Features

- Duplex design; double-layer webbing.
- Capacity stripes, each stripe represents 1 t.
- Every 30 mm webbing width equals 1 t capacity.
- Steel triangle end fittings provide enhanced durability and rigid connection.

Standard delivery

- Supplied individually packaged, including Rema instruction manual.

Application

- Heavy-duty lifting where rigid end fittings are required (e.g. hooks, shackles).

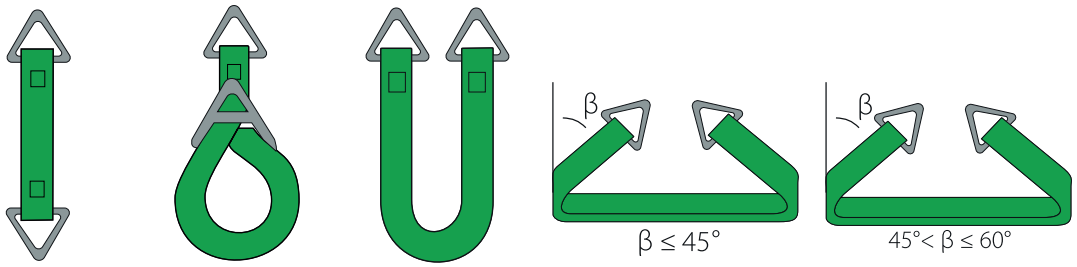

	WLL (kg)				
1.000 KG	1.000	800	2.000	1.400	1.000
2.000 KG	2.000	1.600	4.000	2.800	2.000
3.000 KG	3.000	2.400	6.000	4.200	3.000
4.000 KG	4.000	3.200	8.000	5.600	4.000
5.000 KG	5.000	4.000	10.000	7.000	5.000

	1.000 KG	2.000 KG	3.000 KG	4.000 KG	5.000 KG
Webbing width	**30 mm**	**60 mm**	**90 mm**	**120 mm**	**150 mm**
Type/length	**Article number**	**Article number**	**Article number**	**Article number**	**Article number**
S3-PE-1M	1213031	1213061	1213091	-	-
S3-PE-2M	1213035	1213065	1213095	1213125	1213155
S3-PE-3M	1213037	1213067	1213097	1213127	1213157
S3-PE-4M	1213039	1213069	1213099	1213129	1213159
S3-PE-5M	1213041	1213071	1213101	1213131	1213161
S3-PE-6M	1213043	1213073	1213103	1213133	1213163
S3-PE-7M	1213045	1213075	1213105	1213135	1213165
S3-PE-8M	1213047	1213077	1213107	1213137	1213167
S3-PE-9M	1213049	1213079	1213109	1213139	1213169
S3-PE-10M	1213051	1213081	1213111	1213141	1213171

Rema S4 polyester sling with equal steel triangles



Professional webbing sling fitted with equal steel triangles at both ends, suitable for intensive industrial lifting applications.

Features

- Duplex design; double-layer webbing.
- Capacity stripes, each stripe represents 1 t.
- Every 30 mm webbing width equals 1 t capacity.

Standard delivery

- Supplied individually packaged, including Rema instruction manual.

Application

- Heavy-duty lifting applications requiring symmetrical steel triangle fittings.

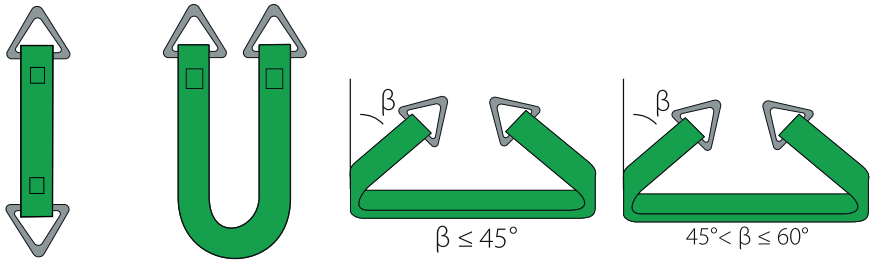

			WLL (kg)	
1.000 KG	1.000	2.000	1.400	1.000
2.000 KG	2.000	4.000	2.800	2.000
3.000 KG	3.000	6.000	4.200	3.000
4.000 KG	4.000	8.000	5.600	4.000
5.000 KG	5.000	10.000	7.000	5.000

	1.000 KG	**2.000 KG**	**3.000 KG**	**4.000 KG**	**5.000 KG**
Webbing width	**30 mm**	**60 mm**	**90 mm**	**120 mm**	**150 mm**
Type/length	**Article number**	**Article number**	**Article number**	**Article number**	**Article number**
S4-PE-1M	1214031	1214061	1214091	-	-
S4-PE-2M	1214035	1214065	1214095	1214125	1214155
S4-PE-3M	1214037	1214067	1214097	1214127	1214157
S4-PE-4M	1214039	1214069	1214099	1214129	1214159
S4-PE-5M	1214041	1214071	1214101	1214131	1214161
S4-PE-6M	1214043	1214073	1214103	1214133	1214163
S4-PE-7M	1214045	1214075	1214105	1214135	1214165
S4-PE-8M	1214047	1214077	1214107	1214137	1214167
S4-PE-9M	1214049	1214079	1214109	1214139	1214169
S4-PE-10M	1214051	1214081	1214111	1214141	1214171

Rema S5 polyester round sling



Standard polyester round sling for industrial lifting use..

Features

- Capacity stripes, each stripe represents 1 t.
- Continuous imprint of the load capacity.
- Increased wear resistance through woven insert yarns in the sleeve.
- Sleeve-protected label.

Standard delivery

- Supplied individually packaged, including Rema instruction manual.
- Commissioning report included (Belgium).

Application

- Heavy-duty lifting applications requiring symmetrical steel triangle fittings.



Sleeve protected label

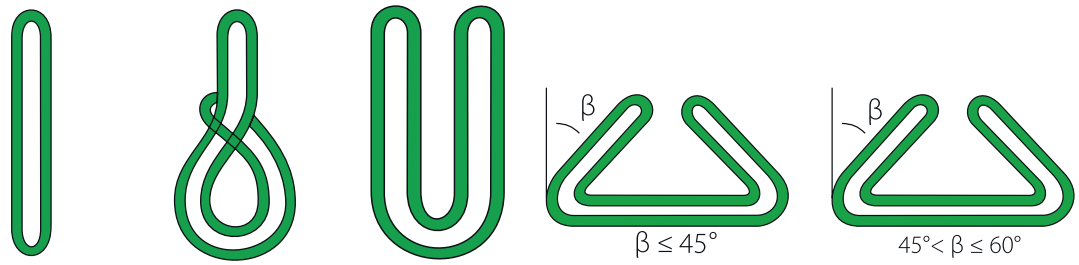

WLL (kg)

1.000 KG	1.000	800	2.000	1.400	1.000
2.000 KG	2.000	1.600	4.000	2.800	2.000
3.000 KG	3.000	2.400	6.000	4.200	3.000
4.000 KG	4.000	3.200	8.000	5.600	4.000
5.000 KG	5.000	4.000	10.000	7.000	5.000
6.000 KG	6.000	4.800	12.000	8.400	6.000
8.000 KG	8.000	6.400	16.000	11.200	8.000
10.000 KG	10.000	8.000	20.000	14.000	10.000

Type/length	Working length (m)	Circumference length (m)	1.000 KG	2.000 KG	3.000 KG	4.000 KG	5.000 KG	6.000 KG	8.000 KG	10.000 KG
			Article number	Article number	Article number	Article number	Article number	Article number	Article number	Article number
S5-PE-0,5M	0,5	1,0	1301000	1303000	1305000	1306000	-	-	-	-
S5-PE-1M	1,0	2,0	1301001	1303001	1305001	1306001	1307001	1308001	1309001	1311001
S5-PE-1,5M	1,5	3,0	1301003	1303003	1305003	1306003	1307003	1308003	1309003	1311003
S5-PE-2M	2,0	4,0	1301005	1303005	1305005	1306005	1307005	1308005	1309005	1311005
S5-PE-2,5M	2,5	5,0	1301007	1303007	1305007	1306007	1307007	1308007	1309007	1311007
S5-PE-3M	3,0	6,0	1301009	1303009	1305009	1306009	1307009	1308009	1309009	1311009
S5-PE-3,5M	3,5	7,0	1301010	1303010	1305010	1306010	1307010	1308010	1309010	1311010
S5-PE-4M	4,0	8,0	1301011	1303011	1305011	1306011	1307011	1308011	1309011	1311011
S5-PE-4,5M	4,5	9,0	1301012	1303012	1305012	1306012	1307012	1308012	1309012	1311012
S5-PE-5M	5,0	10,0	1301013	1303013	1305013	1306013	1307013	1308013	1309013	1311013
S5-PE-6M	6,0	12,0	1301015	1303015	1305015	1306015	1307015	1308015	1309015	1311015

Rema S5 EX polyester round sling



High-quality round sling, proven for many years in heavy-duty industrial use in Germany.

Features

- Capacity stripes, each stripe represents 1 t (up to 10 t).
- Continuous imprint of the load capacity.
- High-quality herringbone polyester sleeve; woven-in monofil thread ensures strong, wear-resistant cover.
- Ribbed sleeve structure provides higher abrasion resistance.
- Sleeve-protected label.

Standard delivery

- Supplied individually packaged, including Rema instruction manual.
- Commissioning report included (Belgium).



Sleeve protected label

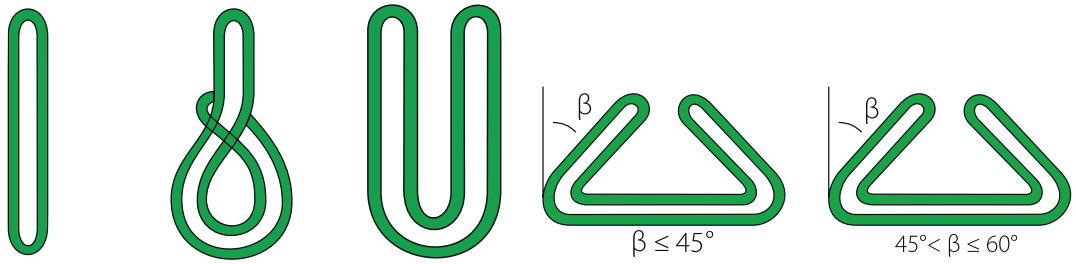

	WLL (kg)				
1.000 KG	1.000	800	2.000	1.400	1.000
2.000 KG	2.000	1.600	4.000	2.800	2.000
3.000 KG	3.000	2.400	6.000	4.200	3.000
4.000 KG	4.000	3.200	8.000	5.600	4.000
5.000 KG	5.000	4.000	10.000	7.000	5.000
6.000 KG	6.000	4.800	12.000	8.400	6.000
8.000 KG	8.000	6.400	16.000	11.200	8.000
10.000 KG	10.000	8.000	20.000	14.000	10.000

Type/length	Working length (m)	Circumference length (m)	1.000 KG	2.000 KG	3.000 KG	4.000 KG	5.000 KG	6.000 KG	8.000 KG	10.000 KG
			Article number	Article number	Article number	Article number	Article number	Article number	Article number	Article number
S5EX-PE-1M	1,0	2,0	1321001	1323001	1325001	1326001	1327001	1328001	1329001	1331001
S5EX-PE-1,5M	1,5	3,0	1321003	1323003	1325003	1326003	1327003	1328003	1329003	1331003
S5EX-PE-2M	2,0	4,0	1321005	1323005	1325005	1326005	1327005	1328005	1329005	1331005
S5EX-PE-2,5M	2,5	5,0	1321007	1323007	1325007	1326007	1327007	1328007	1329007	1331007
S5EX-PE-3M	3,0	6,0	1321009	1323009	1325009	1326009	1327009	1328009	1329009	1331009
S5EX-PE-3,5M	3,5	7,0	1321010	1323010	1325010	1326010	1327010	1328010	1329010	1331010
S5EX-PE-4M	4,0	8,0	1321011	1303011	1325011	1326011	1327011	1328011	1329011	1331011
S5-PE-5M	5,0	10,0	1321013	1303013	1325013	1326013	1327013	1328013	1329013	1331013

Rema BS protective sleeve (PVC)

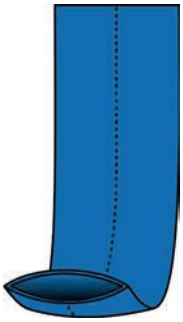

Protective PVC sleeve suitable for Rema S5 round slings.

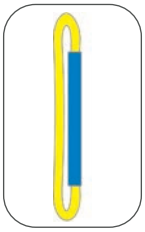

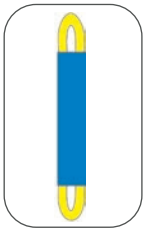

Options

- Price on request. Only available to order.

Type	For webbing width (mm)	P1 WLL (kg)	P2 WLL (kg)	Internal dimensions (mm)	Article number
BS-50	30 - 50	1t - 2t	2t	60	**1107050**
BS-60	60	3t - 5t	3t	80	**1107060**
BS-75	75 - 100	6t - 8t	5t	100	**1107075**
BS-100	-	10t	6t - 10t	120	**1107090**
BS-150	120	12t - 30t	12t - 15t	160	**1107150**
BS-180	150 - 180	35t - 50t	20t - 30t	200	**1107180**
BS-200	200	55t - 60t	35 - 45t	235	**1107200**
BS-300	240 - 300	65t - 100t	50 - 70t	315	**1107300**

Applicable when using round slings.

Rema DF polyurethane protection plate

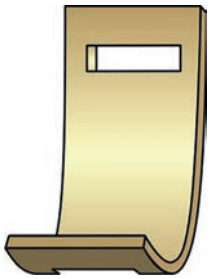

Rema protective equipment for safe and trouble-free lifting.
Especially important when lifting products with rough surfaces or sharp edges. Suitable for Rema S1 webbing slings

Rema DF polyurethane protection plate.
Suitable for Rema S1 webbing slings.



Type	For Webbing Width (mm)	For Round Slings (t)	Internal Dimensions A × B (mm)	External Dimensions L × H (mm)	Article number
DF-60	50	1t/2t	60x30	450x100	**1105060**
DF-70	60	2t	70x30	450x120	**1105070**
DF-80	65/75	3t	80x30	450x120	**1105080**
DF-90	80	4t	90 x 40	470x130	**1105090**
DF-100	90	-	100x40	470x150	**1105100**
DF-110	100	5t	110x40	470x150	**1105110**
DF-130	120	8t	130x40	470x170	**1105130**
DF-160	150	-	160x40	470 X 200	**1105160**
DF-220	210	-	220 X 40	470 X 240	**1105220**

Rema BV and BC protective sleeves

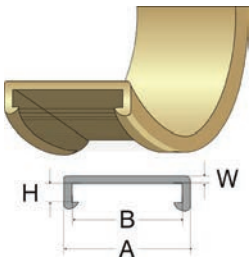

Rema BV polyurethaan protection sleeve

- Suitable for Rema S1 and S5.
- Suitable for heavy-duty conditions.
- Available single- or double-sided.

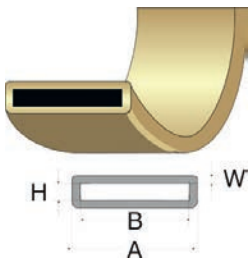

Rema BC polyurethane fixed coating

- Suitable for Rema S1.
- Suitable for very heavy-duty applications.
- Elastic and wear-resistant.
- Available single- or double-sided.

Important:
The BC sleeve is not available separately, only supplied in combination with the specified slings.

Type A/B/H.W	For Webbing Width up to (mm)
50/40/10/5	30
80/70/12/5	60
110/100/12/5	90
145/135/12/5	120
170/160/12/5	150
200/190/12/5	180
260/250/15/8	240
330/320/15/8	300

Rema Re-line R1 r-PET flat webbing sling with reinforced eyes



Durable webbing sling made of recycled polyester (r-PET). Designed for lifting operations while contributing to sustainability goals. Reinforced lifting eyes provide extra protection at the connection points.

Features

- Made from recycled polyester (r-PET).
- Working load limit (WLL) up to 3 t.
- Safety factor 7:1.
- Reinforced eyes, minimum 40% covered with additional webbing.
- WLL clearly printed on the sling.
- Colour coding indicates WLL.
- Integrated QR code provides digital access to the user manual.

Standard delivery

- Supplied individually packaged.
- Factory certificate.
- Commissioning report included (Belgium).

Application

- Eco-friendly alternative to conventional polyester slings, suitable for general industrial lifting.

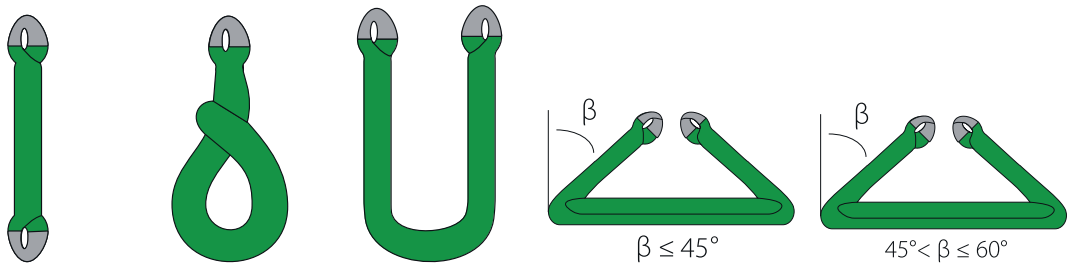

	WLL (kg)				
1.000 KG	1.000	800	2.000	1.400	1.000
2.000 KG	2.000	1.600	4.000	2.800	2.000
3.000 KG	3.000	2.400	6.000	4.200	3.000

Type/length	Working length (m)	Circumference length (m)	1.000 KG	2.000 KG	3.000 KG
			Article number	Article number	Article number
RE-LINE-R1-1M	1,0	2,0	**1261010**	**1262010**	**1263010**
RE-LINE-R1-2M	2,0	4,0	**1261020**	**1262020**	**1263020**
RE-LINE-R1-3M	3,0	6,0	**1261030**	**1262030**	**1263030**
RE-LINE-R1-4M	4,0	8,0	**1261040**	**1262040**	**1263040**

Rema Re-line R5 r-PET round sling



Robust, eco-friendly round sling made of recycled polyester (r-PET). Designed for heavy-duty lifting with enhanced durability through a protective sleeve.

Features

- Made from recycled polyester (r-PET).
- Working load limit (WLL) up to 3 t.
- Safety factor 7:1.
- Protective sleeve for extended service life.
- Sleeve-protected label.
- WLL clearly printed on the sling.
- Colour coding indicates WLL.
- Integrated QR code provides digital access to the user manual.

Standard delivery

- Supplied individually packaged.
- Factory certificate.
- Commissioning report included (Belgium).

Application

- Eco-friendly alternative to conventional polyester slings, suitable for general industrial lifting.

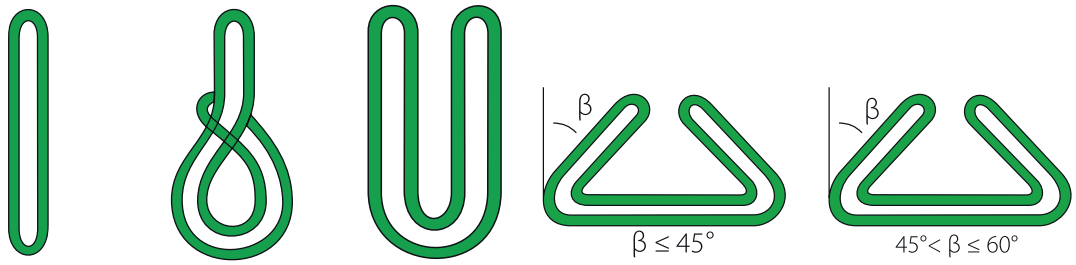

	WLL (kg)				
1.000 KG	1.000	800	2.000	1.400	1.000
2.000 KG	2.000	1.600	4.000	2.800	2.000
3.000 KG	3.000	2.400	6.000	4.200	3.000

Type/length	Working length (m)	Circumference length (m)	1.000 KG	2.000 KG	3.000 KG
			Article number	Article number	Article number
RE-LINE-R5-1M	1,0	2,0	**1341010**	**1342010**	**1343010**
RE-LINE-R5-2M	2,0	4,0	**1341020**	**1342020**	**1343020**
RE-LINE-R5-3M	3,0	6,0	**1341030**	**1342030**	**1343030**
RE-LINE-R5-4M	4,0	8,0	**1341040**	**1342040**	**1343040**

Rema 1-leg sling with chain components

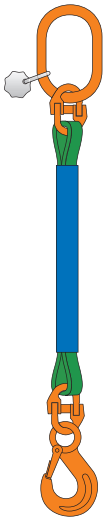

Single-leg REMA-10 CHAIN SLING COMPONENTS with G10 end fittings. Designed for straightforward lifting with one lifting point.

Features
- G10 end fittings.
- Round sling coupling (WCL) for safe and reliable connection of round slings with end fittings.
- Identification label.
- Standard round sling length: 1 m.

Options
- Additional lengths on request.
- Protective sleeve available on request.

Type	WLL (kg)	Round sling type	Protective sleeve type	Master link type	Coupling type	Hook type	Article number
1SPR-1.000KG-1M	1.000	S5-1.0	BS-50	RML-86-G10	WCL-8-G10	REH-8-G10	**2591101**
1SPR-2.000KG-1M	2.000	S5-2.0	BS-50	RML-86-G10	WCL-8-G10	REH-8-G10	**2591201**
1SPR-3.000KG-1M	3.000	S5-3.0	BS-60	RML-108-G10	WCL-10-G10	REH-10-G10	**2591301**
1SPR-4.000KG-1M	4.000	S5-4.0	BS-75	RML1310-G10	WCL-13-G10	REH-13-G10	**2591401**
1SPR-5.000KG-1M	5.000	S5-5.0	BS-75	RML1310-G10	WCL-13-G10	REH-13-G10	**2591501**

Rema 2-leg sling with chain components

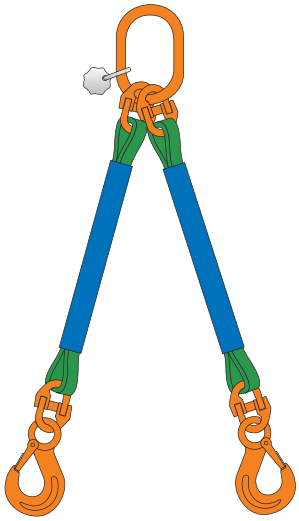

Two-leg REMA-10 CHAIN SLING COMPONENTS with G10 end fittings. Provides greater lifting capacity and stability for loads requiring two lifting points.

Features
- G10 end fittings.
- Round sling couplings (WCL) for safe and reliable connection of round slings with end fittings.
- Identification label.
- Standard round sling length: 1 m.

Options
- Additional lengths on request.
- Protective sleeve available on request.

Type	WLL (kg)	Round sling type	Protective sleeve type	Master link type	Coupling type	Hook type	Article number
2SPR-1.400KG-1M	1.400-1.000	S5-1.0	BS-50	RML-86-G10	WCL-8-G10	REH-8-G10	**2592101**
2SPR-2.800KG-1M	2.800-2.000	S5-2.0	BS-50	RML-108-G10	WCL-8-G10	REH-8-G10	**2592201**
2SPR-4.200KG-1M	4.200-3.000	S5-3.0	BS-60	RML-1310-G10	WCL-10-G10	REH-10-G10	**2592301**
2SPR-5.600KG-1M	5.600-4.000	S5-4.0	BS-75	RML-1613-G10	WCL-13-G10	REH-13-G10	**2592401**
2SPR-7.000KG-1M	7.000-5.000	S5-5.0	BS-75	RML-1613-G10	WCL-13-G10	REH-13-G10	**2592501**

Rema 3-leg sling with chain components

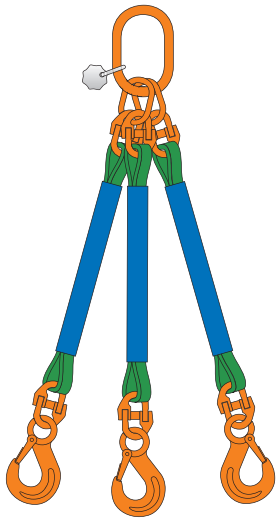

Three-leg REMA-10 CHAIN SLING COMPONENTS with G10 end fittings. Offers versatile lifting capability for loads with three attachment points.

Features
- G10 end fittings.
- Round sling couplings (WCL) for safe and reliable connection of round slings with end fittings.
- Identification label.
- Standard round sling length: 1 m.

Options
- Additional lengths on request.
- Protective sleeve available on request.

Type	WLL (kg)	Round sling type	Protective sleeve type	Master link type	Coupling type	Hook type	Article number
3SPR-2.100KG-1M	2.100-1.500	S5-1.0	BS-50	RMA-8-G10	WCL-8-G10	REH-8-G10	**2593101**
3SPR-4.200KG-1M	4.200-3.000	S5-2.0	BS-50	RMA-8-G10	WCL-8-G10	REH-8-G10	**2593201**
3SPR-6.300KG-1M	6.300-4.500	S5-3.0	BS-60	RMA-10-G10	WCL-10-G10	REH-10-G10	**2593301**
3SPR-8.400KG-1M	8.400-6.000	S5-4.0	BS-75	RMA-13-G10	WCL-13-G10	REH-13-G10	**2593401**
3SPR-10.500KG-1M	10.500-7.500	S5-5.0	BS-75	RMA-13-G10	WCL-13-G10	REH-13-G10	**2593501**

Rema 4-leg sling with chain components

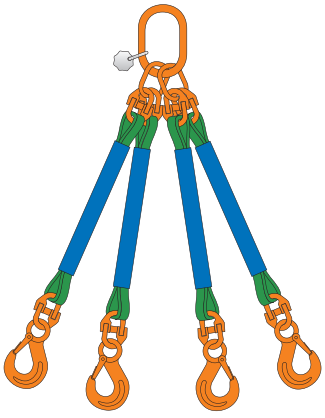

Four-leg REMA-10 CHAIN SLING COMPONENTS with G10 end fittings. Designed for heavy-duty lifting, providing maximum load stability with four lifting points.

Features
- rade 10 end fittings.
- Round sling couplings (WCL) for safe and reliable connection of round slings with end fittings.
- Identification label.
- Standard round sling length: 1 m.

Options
- Additional lengths on request.
- Protective sleeve available on request.

Type	WLL (kg)	Round sling type	Protective sleeve type	Master link type	Coupling type	Hook type	Article number
4SPR-2.100KG-1M	2.100-1.500	S5-1.0	BS-50	RMA-8-G10	WCL-8-G10	REH-8-G10	**2594101**
4SPR-4.200KG-1M	4.200-3.000	S5-2.0	BS-50	RMA-8-G10	WCL-8-G10	REH-8-G10	**2594201**
4SPR-6.300KG-1M	6.300-4.500	S5-3.0	BS-60	RMA-10-G10	WCL-10-G10	REH-10-G10	**2594301**
4SPR-8.400KG-1M	8.400-6.000	S5-4.0	BS-75	RMA-13-G10	WCL-13-G10	REH-13-G10	**2594401**
4SPR-10.500KG-1M	10.500-7.500	S5-5.0	BS-75	RMA-13-G10	WCL-13-G10	REH-13-G10	**2594501**

Rema RWSH webbing sling hook (G10)



G10 hook with safety latch, ideal for use in combination with webbing slings and round slings.

Features

- G10.
- Powder-coated in the colour of the webbing sling according to EN 1492-1 and EN 1492-2.
- H-stamp H84.

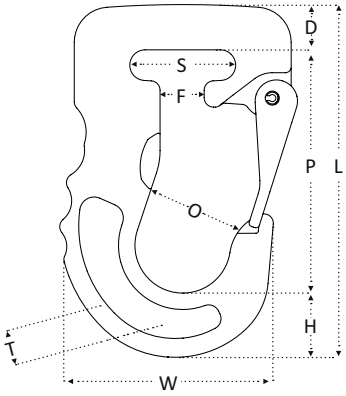

Type	WLL (kg)	P (mm)	D (mm)	L (mm)	F (mm)	S (mm)	T (mm)	H (mm)	O (mm)	W (mm)	Weight (kg)	Article number
RWSH-1	1.000	87	16	124	11,5	40,0	17	21	30	75,7	0,73	**2652001**
RWSH-2	2.000	103	18	148	18,5	44,5	21	27	39	90,0	1,27	**2652002**
RSWH-3	3.000	115	27	175	21,5	54,0	26	33	47	110,0	2,30	**2652003**

Rema System S galvanized wire rope sling

Rema System S galvanized wire rope sling

Features

- Standard working length: 1 m.

Options

- Longer lengths available on request.
- Higher capacities available on request.



Type	WLL (kg)	Cable diameter (mm) (mm)	Article number
SLL-1T-10MM-1M	1.000	10	**3101001**
SLL-1.45T-12MM-1M	1.450	12	**3101011**
SLL-2T-14MM-1M	2.000	14	**3101021**
SLL-2.5T-16MM-1M	2.500	16	**3101031**
SLL-3.2T-18MM-1M	3.200	18	**3101051**
SLHS-1T-10MM-1M	1.000	10	**3102001**
SLHS-1.45T-12MM-1M	1.450	12	**3102011**
SLHS-2T-14MM-1M	2.000	14	**3102021**
SLHS-2.5T-16MM-1M	2.500	16	**3102031**
SLHS-2.5T-16MM-1M	2.500	16	**3102041**
SLHS-3.2T-18MM-1M	3.200	18	**3102051**
SLK-1T-10MM-1M	1.000	10	**3103101**
SLK-1.45T-12MM-1M	1.450	12	**3103201**
SLK-2T-14MM-1M	2.000	14	**3103301**
SLK-2.5T-16MM-1M	2.500	16	**3103401**
SLK-3.2T-18MM-1M	3.200	18	**3103501**
SKK-1T-10MM-1M	1.000	10	**3104101**
SKK-1.45T-12MM-1M	1.450	12	**3104201**
SKK-2T-14MM-1M	2.000	14	**3104301**
SKK-2.5T-16MM-1M	2.500	16	**3104401**
SKK-3.2T-18MM-1M	3.200	18	**3104501**
SLLH-1T-10MM-1M	1.000	10	**3105101**
SLLH-1.45T-12MM-1M	1.450	12	**3105201**
SLLH-2T-14MM-1M	2.000	14	**3105301**
SLLH-2.5T-16MM-1M	2.500	16	**3105401**
SLLH-3.2T-18MM-1M	3.200	18	**3105501**
SLWS-1T-10MM-1M	1.000	10	**3106101**
SLWS-1.45T-12MM-1M	1.450	12	**3106201**
SLWS-2T-14MM-1M	2.000	14	**3106301**
SLWS-2.5T-16MM-1M	2.500	16	**3106401**
SLWS-3.2T-18MM-1M	3.200	18	**3106501**
SLSCH-1T-10MM-1M	1.000	10	**3107101**
SLSCH-1.45T-12MM-1M	1.450	12	**3107201**
SLSCH-2T-14MM-1M	2.000	14	**3107301**
SLSCH-2.5T-16MM-1M	2.500	16	**3107401**
SLSCH-3.2T-18MM-1M	3.200	18	**3107501**

Rema System T wire rope sling 1-leg

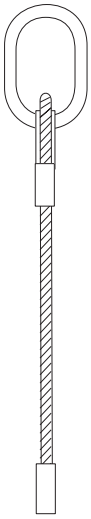

Galvanized wire rope assembly with master link and G10 end fittings. Designed for lifting with one attachment point.

Options
– Longer lengths available on request.
– Higher capacities available on request.

Features
– Standard working length: 1 m.

Type	WLL (kg)	Cable Diameter (mm)	Article number
SK1-EHS-10MM-1M	1.000	10	**3110111**
SK1-ELH-10MM-1M	1.000	10	**3110121**
SK1-EWS-10MM-1M	1.000	10	**3110131**
SK1-ESCH-10MM-1M	1.000	10	**3110141**
SK1-EHS-12MM-1M	1.450	12	**3112111**
SK1-ELH-12MM-1M	1.450	12	**3112121**
SK1-EWS-12MM-1M	1.450	12	**3112131**
SK1-ESCH-12MM-1M	1.450	12	**3112141**
SK1-EHS-14MM-1M	2.000	14	**3114111**
SK1-ELH-14MM-1M	2.000	14	**3114121**
SK1-EWS-14MM-1M	2.000	14	**3114131**
SK1-ESCH-14MM-1M	2.000	14	**3114141**
SK1-EHS-16MM-1M	2.500	16	**3116111**
SK1-ELH-16MM-1M	2.500	16	**3116121**
SK1-EWS-16MM-1M	2.500	16	**3116131**
SK1-ESCH-16MM-1M	2.500	16	**3116141**
SK1-EHS-18MM-1M	3.200	18	**3118111**
SK1-ELH-18MM-1M	3.200	18	**3118121**
SK1-EWS-18MM-1M	3.200	18	**3118131**
SK1-ESCH-18MM-1M	3.200	18	**3118141**

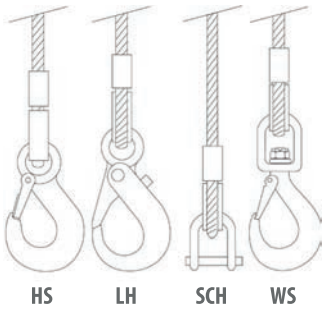

Available with the following G10 end fittings:
- **HS:** Eye hook (sling hook).
- **LH:** Safety eye hook (eye hook with safety latch).
- **WS:** Swivel eye safety hook (swivel eye hook with safety latch).
- **SCH:** Shackle.

Rema System T 2-leg wire rope sling

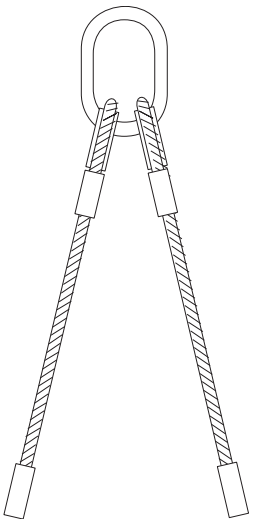

Two-leg galvanized wire rope assembly with master link and G10 end fittings. Provides higher lifting capacity and load stability with two lifting points.

Options
– Longer lengths available on request.
– Higher capacities available on request.

Features
– Standard working length: 1 m.

Type	WLL (kg)	Cable Diameter (mm)	Article number
SK2-EHS-10MM-1M	1.400-1.000	10	**3110211**
SK2-ELH-10MM-1M	1.400-1.000	10	**3110221**
SK2-EWS-10MM-1M	1.400-1.000	10	**3110231**
SK2-ESCH-10MM-1M	1.400-1.000	10	**3110241**
SK2-EHS-12MM-1M	2.000-1.450	12	**3112211**
SK2-ELH-12MM-1M	2.000-1.450	12	**3112221**
SK2-EWS-12MM-1M	2.000-1.450	12	**3112231**
SK2-ESCH-12MM-1M	2.000-1.450	12	**3112241**
SK2-EHS-14MM-1M	2.800-2.000	14	**3114211**
SK2-ELH-14MM-1M	2.800-2.000	14	**3114221**
SK2-EWS-14MM-1M	2.800-2.000	14	**3114231**
SK2-ESCH-14MM-1M	2.800-2.000	14	**3114241**
SK2-EHS-16MM-1M	3.500-2.500	16	**3116211**
SK2-ELH-16MM-1M	3.500-2.500	16	**3116221**
SK2-EWS-16MM-1M	3.500-2.500	16	**3116231**
SK2-ESCH-16MM-1M	3.500-2.500	16	**3116241**
SK2-EHS-18MM-1M	4.500-3.200	18	**3118211**
SK2-ELH-18MM-1M	4.500-3.200	18	**3118221**
SK2-EWS-18MM-1M	4.500-3.200	18	**3118231**
SK2-ESCH-18MM-1M	4.500-3.200	18	**3118241**

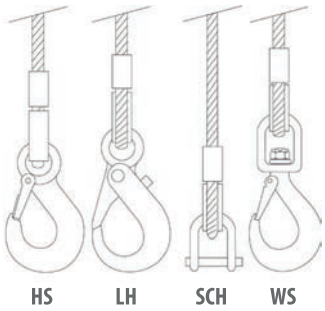

Available with the following G10 end fittings:
- **HS:** Eye hook (sling hook).
- **LH:** Safety eye hook (eye hook with safety latch).
- **WS:** Swivel eye safety hook (swivel eye hook with safety latch).
- **SCH:** Shackle.

Rema System T 3-leg wire rope sling

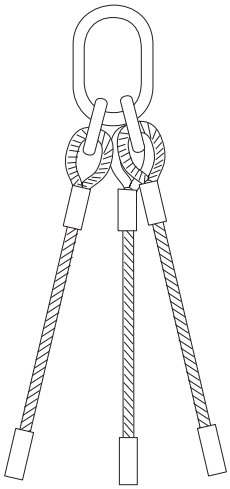

Three-leg galvanized wire rope assembly with master link and G10 end fittings. Offers versatile lifting capability for loads with three attachment points.

Options
– Longer lengths available on request.
– Higher capacities available on request.

Features
– Standard working length: 1 m.

Type	WLL (kg)	Cable Diameter (mm)	Article number
SK3-EHS-10MM-1M-1T	2.100-1.500	10	**3110311**
SK3-ELH-10MM-1M-1T	2.100-1.500	10	**3110321**
SK3-EWS-10MM-1M-1T	2.100-1.500	10	**3110331**
SK3-ESCH-10MM-1M-1T	2.100-1.500	10	**3110341**
SK3-EHS-12MM-1M-1.45T	3.000-2.150	12	**3112311**
SK3-ELH-12MM-1M-1.45T	3.000-2.150	12	**3112321**
SK3-EWS-12MM-1M-1.45T	3000-2.150	12	**3112331**
SK3-ESCH-12MM-1M-1.45T	3.000-2.150	12	**3112341**
SK3-EHS-14MM-1M-2T	4.200-3.000	14	**3114311**
SK3-ELH-14MM-1M-2T	4.200-3.000	14	**3114321**
SK3-EWS-14MM-1M-2T	4.200-3.000	14	**3114331**
SK3-ESCH-14MM-1M-2T	4.200-3.000	14	**3114341**
SK3-EHS-16MM-1M-2.5T	5.250-3.750	16	**3116311**
SK3-ELH-16MM-1M-2.5T	5.250-3.750	16	**3116321**
SK3-EWS-16MM-1M-2.5T	5.250-3.750	16	**3116331**
SK3-ESCH-16MM-1M-2.5T	5.250-3.750	16	**3116341**
SK3-EHS-18MM-1M-3.2T	6.700-4.800	18	**3118311**
SK3-ELH-18MM-1M-3.2T	6.700-4.800	18	**3118321**
SK3-EWS-18MM-1M-3.2T	6.700-4.800	18	**3118331**
SK3-ESCH-18MM-1M-3.2T	6.700-4.800	18	**3118341**

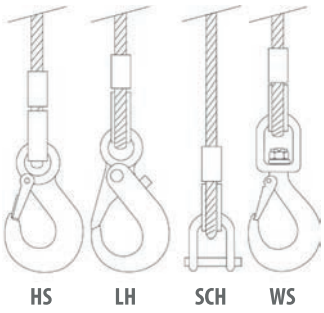

Available with the following G10 end fittings:
- **HS:** Eye hook (sling hook).
- **LH:** Safety eye hook (eye hook with safety latch).
- **WS:** Swivel eye safety hook (swivel eye hook with safety latch).
- **SCH:** Shackle.

Rema System T 4-leg wire rope sling

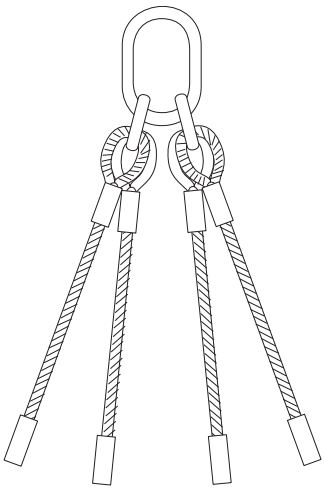

Four-leg galvanized wire rope assembly with master link and G10 end fittings. Designed for heavy-duty lifting with maximum load stability across four lifting points.

Options
– Longer lengths available on request.
– Higher capacities available on request.

Features
– Standard working length: 1 m.

Type	WLL (kg)	Cable Diameter (mm)	Article number
SK4-EHS-10MM-1M-1T	2.100-1.500	10	**3110411**
SK4-ELH-10MM-1M-1T	2.100-1.500	10	**3110421**
SK4-EWS-10MM-1M-1T	2.100-1.500	10	**3110431**
SK4-ESCH-10MM-1M-1T	2.100-1.500	10	**3110441**
SK4-EHS-12MM-1M-1.45T	3.000-2.150	12	**3112411**
SK4-ELH-12MM-1M-1.45T	3.000-2.150	12	**3112421**
SK4-EWS-12MM-1M-1.45T	3.000-2.150	12	**3112431**
SK4-ESCH-12MM-1M-1.45T	3.000-2.150	12	**3112441**
SK4-EHS-14MM-1M-2T	4.200-3.000	14	**3114411**
SK4-ELH-14MM-1M-2T	4.200-3.000	14	**3114421**
SK4-EWS-14MM-1M-2T	4.200-3.000	14	**3114431**
SK4-ESCH-14MM-1M-2T	4.200-3.000	14	**3114441**
SK4-EHS-16MM-1M-2.5T	5.250-3.750	16	**3116411**
SK4-ELH-16MM-1M-2.5T	5.250-3.750	16	**3116421**
SK4-EWS-16MM-1M-2.5T	5.250-3.750	16	**3116431**
SK4-ESCH-16MM-1M-2.5T	5.250-3.750	16	**3116441**
SK4-EHS-18MM-1M-3.2T	6.700-4.800	18	**3118411**
SK4-ELH-18MM-1M-3.2T	6.700-4.800	18	**3118421**
SK4-EWS-18MM-1M-3.2T	6.700-4.800	18	**3118431**
SK4-ESCH-18MM-1M-3.2T	6.700-4.800	18	**3118441**

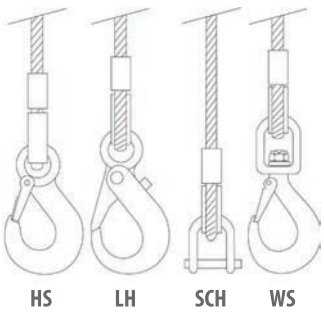

Available with the following G10 end fittings:
- **HS:** Eye hook (sling hook).
- **LH:** Safety eye hook (eye hook with safety latch).
- **WS:** Swivel eye safety hook (swivel eye hook with safety latch).
- **SCH:** Shackle.

Rema 10

When selecting an approved chain for lifting applications, Grades 8, 10 and 12 are the most commonly used chain qualities. G10 is a relatively new development in the metal industry and is increasingly replacing Grade 8 chains.

Rema G10 chain and its corresponding component range offer approximately 25% higher working load capacity, with a weight increase of only 36%.

Due to the higher strength of G10 compared to Grade 8, G10 is increasingly used because a smaller chain diameter can be applied without reducing the maximum working load limit (WLL). The Rema G10 program offers additional advantages, including improved handling and higher efficiency. Furthermore, the higher alloy content of G10 products makes them more robust and more resistant to material fatigue.

In addition, the chains and components are produced in a more environmentally efficient manner. Due to reduced material consumption and overall lower product weight, less energy is required during production. Consequently, fewer raw materials are required. All of this contributes to a reduced ecological footprint — a principle Rema stands for.

G10 vs G8

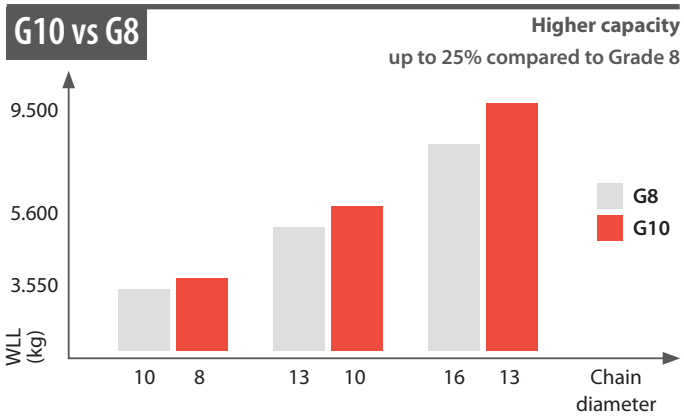

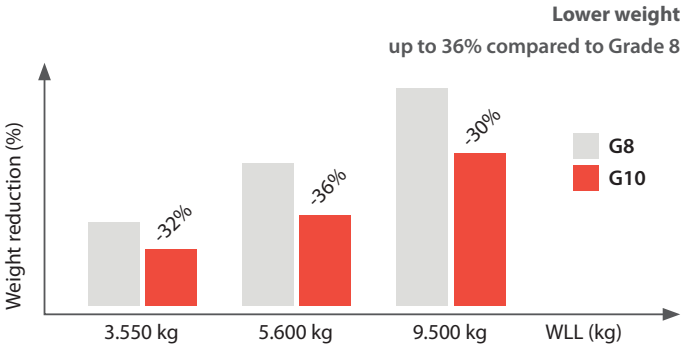

Working load table

The WLL values stated in the table below represent the maximum load for which Rema chains are designed under general lifting conditions, in accordance with the standard qualification method for uniform loading.

In exceptionally complex situations or specific conditions that require an adjusted WLL lower than the values specified in the table, the risk must always be assessed by a competent person and the working load must be adjusted accordingly.

		Leng		2-leg				3-4-sprong		Eindloos
Safety Factor 4		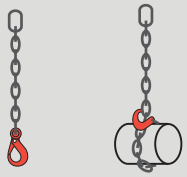		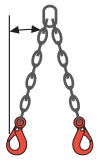		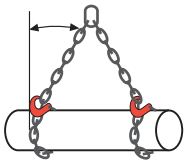		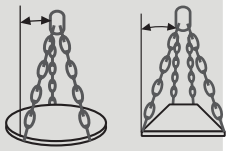		
Hoek		-	-	0 - 45°	45° - 60°	0 - 45°	45° - 60°	0 - 45°	45° - 60°	-
Load factor		1	0,8	1,4	1	1,12	0,8	2,1	1,5	1,6
Type	**Ø**	**WLL**								
REMA 10 - 6	**6**	**1.400**	**1.120**	**1.960**	**1.400**	**1.570**	**1.120**	**2.940**	**2.100**	**2.240**
G8	6	1.120	900	1.600	1.120	1.250	900	2.360	1.700	1.800
REMA 10 - 8	**8**	**2.500**	**2.000**	**3.500**	**2.500**	**2.800**	**2.000**	**5.250**	**3.750**	**4.000**
G8	8	2.000	1.600	2.800	2.000	2.240	1.600	4.250	3.000	3.150
REMA 10 - 10	**10**	**4.000**	**3.200**	**5.600**	**4.000**	**4.480**	**3.200**	**8.400**	**6.000**	**6.400**
G8	10	3.150	2.500	4.250	3.150	3.550	2.500	6.700	4.750	5.000
REMA 10 - 13	**13**	**6.700**	**5.360**	**9.380**	**6.700**	**7.500**	**5.360**	**14.000**	**10.050**	**10.720**
G8	13	5.300	4.250	7.500	5.300	5.900	4.250	11.200	8.000	8.500
REMA 10 - 16	**16**	**10.000**	**8.000**	**14.000**	**10.000**	**11.200**	**8.000**	**21.000**	**15.000**	**16.000**
G8	16	8.000	6.300	11.200	8.000	9.000	6.300	17.000	11.800	12.500

Technical information

General stress at nominal load	250 N/mm²
Stress at proof load	625 N/mm²
Stress at breaking load	1,000 N/mm²
Specific elongation at break	20%
Bending (according to EN 818-2)	0.8 × chain diameter
Operating temperature	-40°C to +200°C
Quality class designation	G10
Surface finish, chain	Rema blue-grey powder coating
Surface finish, components	Rema orange powder coating

Safety standards

Standards	PAS 1065
EN 818, EN 1677	ISO 9001
DIN 17115, DIN 5692	ISO 45001
REMA quality standard	ISO 9001
REMA safety standard	ISO 45001
REMA identification label	Rema-10

General use

If chains and/or components are used under exceptional or difficult conditions (extreme temperatures, asymmetrical loading, angular loading or dynamic loading), the values in the table above must be reduced by the load factors indicated below.

Temperature	The use of Rema G10 products is not permitted at temperatures below -40°C or above +200°C.		
Load factor	1		
Asymmetrical Load Distribution	In the case of asymmetrical loading, the chain must be calculated at 50% of the marked maximum WLL.		
Angular Loading (d = thickness of the material)	R > 2 × d 	R > d 	R < d 
Load factor	1	0,7	0,5

Shock loads

Crane operators must take into account the risk of shock loading. Due to shock loading, a chain may break even if the load weight is well below the maximum working load of the chain. High acceleration or shock loading may be caused by sudden movement of the crane.

Avoid snatch loading, which occurs when the chain is suddenly tensioned with high force. Sudden impact caused by a falling load may create hazardous situations.

Shock load level	**Light shocks**	**Medium shocks**	**Heavy shocks**
Load factor	1	0,7	Not permitted

Rema-10 chain sling 1-leg RML with RCH



WLL (kg)	1.400	2.500	4.000	6.700	10.000
Length (m)	6 mm	8 mm	10 mm	13 mm	16 mm
1,0	2691106-1	2691108-1	2691110-1	2691113-1	2691116-1
1,5	2691106-1.5	2691108-1.5	2691110-1.5	2691113-1.5	2691116-1.5
2,0	2691106-2	2691108-2	2691110-2	2691113-2	2691116-2
2,5	2691106-2.5	2691108-2.5	2691110-2.5	2691113-2.5	2691116-2.5
3,0	2691106-3	2691108-3	2691110-3	2691113-3	2691116-3
3,5	2691106-3.5	2691108-3.5	2691110-3.5	2691113-3.5	2691116-3.5
4,0	2691106-4	2691108-4	2691110-4	2691113-4	2691116-4

Rema-10 chain sling 1-leg RML with RCS



WLL (kg)	1.400	2.500	4.000	6.700	10.000
Length (m)	6 mm	8 mm	10 mm	13 mm	16 mm
1,0	2691206-1	2691208-1	2691210-1	2691213-1	2691216-1
1,5	2691206-1.5	2691208-1.5	2691210-1.5	2691213-1.5	2691216-1.5
2,0	2691206-2	2691208-2	2691210-2	2691213-2	2691216-2
2,5	2691206-2.5	2691208-2.5	2691210-2.5	2691213-2.5	2691216-2.5
3,0	2691206-3	2691208-3	2691210-3	2691213-3	2691216-3
3,5	2691206-3.5	2691208-3.5	2691210-3.5	2691213-3.5	2691216-3.5
4,0	2691206-4	2691208-4	2691210-4	2691213-4	2691216-4

Rema-10 chain sling 1-leg RML with RDG and RCH



WLL (kg)	1.400	2.500	4.000	6.700	10.000
Length (m)	6 mm	8 mm	10 mm	13 mm	16 mm
1,0	2691306-1	2691308-1	2691310-1	2691313-1	2691316-1
1,5	2691306-1.5	2691308-1.5	2691310-1.5	2691313-1.5	2691316-1.5
2,0	2691306-2	2691308-2	2691310-2	2691313-2	2691316-2
2,5	2691306-2.5	2691308-2.5	2691310-2.5	2691313-2.5	2691316-2.5
3,0	2691306-3	2691308-3	2691310-3	2691313-3	2691316-3
3,5	2691306-3.5	2691308-3.5	2691310-3.5	2691313-3.5	2691316-3.5
4,0	2691306-4	2691308-4	2691310-4	2691313-4	2691316-4

Rema-10 chain sling 1-leg RML with RDG and RCS



WLL (kg)	1.400	2.500	4.000	6.700	10.000
Length (m)	6 mm	8 mm	10 mm	13 mm	16 mm
1,0	2691406-1	2691408-1	2691410-1	2691413-1	2691416-1
1,5	2691406-1.5	2691408-1.5	2691410-1.5	2691413-1.5	2691416-1.5
2,0	2691406-2	2691408-2	2691410-2	2691413-2	2691416-2
2,5	2691406-2.5	2691408-2.5	2691410-2.5	2691413-2.5	2691416-2.5
3,0	2691406-3	2691408-3	2691410-3	2691413-3	2691416-3
3,5	2691406-3.5	2691408-3.5	2691410-3.5	2691413-3.5	2691416-3.5
4,0	2691406-4	2691408-4	2691410-4	2691413-4	2691416-4

Rema-10 chain sling 2-leg RML with RCH



WLL (kg)	1.960 1.400	3.500 2.500	5.600 4.000	9.380 6.700	14.000 10.000
Length (m)	**6 mm**	**8 mm**	**10 mm**	**13 mm**	**16 mm**
1,0	2692106-1	2692108-1	2692110-1	2692113-1	2692116-1
1,5	2692106-1.5	2692108-1.5	2692110-1.5	2692113-1.5	2692116-1.5
2,0	2692106-2	2692108-2	2692110-2	2692113-2	2692116-2
2,5	2692106-2.5	2692108-2.5	2692110-2.5	2692113-2.5	2692116-2.5
3,0	2692106-3	2692108-3	2692110-3	2692113-3	2692116-3
3,5	2692106-3.5	2692108-3.5	2692110-3.5	2692113-3.5	2692116-3.5
4,0	2692106-4	2692108-4	2692110-4	2692113-4	2692116-4

Rema-10 chain sling 2-leg RML with RCS



WLL (kg)	1.960 1.400	3.500 2.500	5.600 4.000	9.380 6.700	14.000 10.000
Length (m)	**6 mm**	**8 mm**	**10 mm**	**13 mm**	**16 mm**
1,0	2692206-1	2692208-1	2692210-1	2692213-1	2692216-1
1,5	2692206-1.5	2692208-1.5	2692210-1.5	2692213-1.5	2692216-1.5
2,0	2692206-2	2692208-2	2692210-2	2692213-2	2692216-2
2,5	2692206-2.5	2692208-2.5	2692210-2.5	2692213-2.5	2692216-2.5
3,0	2692206-3	2692208-3	2692210-3	2692213-3	2692216-3
3,5	2692206-3.5	2692208-3.5	2692210-3.5	2692213-3.5	2692216-3.5
4,0	2692206-4	2692208-4	2692210-4	2692213-4	2692216-4

Rema-10 chain sling 2-leg RML with RDG and RCH



WLL (kg)	1.960 1.400	3.500 2.500	5.600 4.000	9.380 6.700	14.000 10.000
Length (m)	**6 mm**	**8 mm**	**10 mm**	**13 mm**	**16 mm**
1,0	2692306-1	2692308-1	2692310-1	2692313-1	2692316-1
1,5	2692306-1.5	2692308-1.5	2692310-1.5	2692313-1.5	2692316-1.5
2,0	2692306-2	2692308-2	2692310-2	2692313-2	2692316-2
2,5	2692306-2.5	2692308-2.5	2692310-2.5	2692313-2.5	2692316-2.5
3,0	2692306-3	2692308-3	2692310-3	2692313-3	2692316-3
3,5	2692306-3.5	2692308-3.5	2692310-3.5	2692313-3.5	2692316-3.5
4,0	2692306-4	2692308-4	2692310-4	2692313-4	2692316-4

Rema-10 chain sling 2-leg RML with RDG and RCS



WLL (kg)	1.960 1.400	3.500 2.500	5.600 4.000	9.380 6.700	14.000 10.000
Length (m)	**6 mm**	**8 mm**	**10 mm**	**13 mm**	**16 mm**
1,0	2692406-1	2692408-1	2692410-1	2692413-1	2692416-1
1,5	2692406-1.5	2692408-1.5	2692410-1.5	2692413-1.5	2692416-1.5
2,0	2692406-2	2692408-2	2692410-2	2692413-2	2692416-2
2,5	2692406-2.5	2692408-2.5	2692410-2.5	2692413-2.5	2692416-2.5
3,0	2692406-3	2692408-3	2692410-3	2692413-3	2692416-3
3,5	2692406-3.5	2692408-3.5	2692410-3.5	2692413-3.5	2692416-3.5
4,0	2692406-4	2692408-4	2692410-4	2692413-4	2692416-4

Rema-10 chain sling 3-leg RMA with RCH



WLL (kg)	2.940 2.100	5.250 3.750	8.400 6.000	14.000 10.050	21.000 15.000
Length (m)	**6 mm**	**8 mm**	**10 mm**	**13 mm**	**16 mm**
1,0	2693106-1	2693108-1	2693110-1	2693113-1	2693116-1
1,5	2693106-1.5	2693108-1.5	2693110-1.5	2693113-1.5	2693116-1.5
2,0	2693106-2	2693108-2	2693110-2	2693113-2	2693116-2
2,5	2693106-2.5	2693108-2.5	2693110-2.5	2693113-2.5	2693116-2.5
3,0	2693106-3	2693108-3	2693110-3	2693113-3	2693116-3
3,5	2693106-3.5	2693108-3.5	2693110-3.5	2693113-3.5	2693116-3.5
4,0	2693106-4	2693108-4	2693110-4	2693113-4	2693116-4

Rema-10 chain sling 3-leg RMA with RCS



WLL (kg)	2.940 2.100	5.250 3.750	8.400 6.000	14.000 10.050	21.000 15.000
Length (m)	**6 mm**	**8 mm**	**10 mm**	**13 mm**	**16 mm**
1,0	2693206-1	2693208-1	2693210-1	2693213-1	2693216-1
1,5	2693206-1.5	2693208-1.5	2693210-1.5	2693213-1.5	2693216-1.5
2,0	2693206-2	2693208-2	2693210-2	2693213-2	2693216-2
2,5	2693206-2.5	2693208-2.5	2693210-2.5	2693213-2.5	2693216-2.5
3,0	2693206-3	2693208-3	2693210-3	2693213-3	2693216-3
3,5	2693206-3.5	2693208-3.5	2693210-3.5	2693213-3.5	2693216-3.5
4,0	2693206-4	2693208-4	2693210-4	2693213-4	2693216-4

Rema-10 chain sling 3-leg RMA with RDG and RCH



WLL (kg)	2.940 2.100	5.250 3.750	8.400 6.000	14.000 10.050	21.000 15.000
Length (m)	**6 mm**	**8 mm**	**10 mm**	**13 mm**	**16 mm**
1,0	2693306-1	2693308-1	2693310-1	2693313-1	2693316-1
1,5	2693306-1.5	2693308-1.5	2693310-1.5	2693313-1.5	2693316-1.5
2,0	2693306-2	2693308-2	2693310-2	2693313-2	2693316-2
2,5	2693306-2.5	2693308-2.5	2693310-2.5	2693313-2.5	2693316-2.5
3,0	2693306-3	2693308-3	2693310-3	2693313-3	2693316-3
3,5	2693306-3.5	2693308-3.5	2693310-3.5	2693313-3.5	2693316-3.5
4,0	2693306-4	2693308-4	2693310-4	2693313-4	2693316-4

Rema-10 chain sling 3-leg RMA with RDG and RCS



WLL (kg)	2.940 2.100	5.250 3.750	8.400 6.000	14.000 10.050	21.000 15.000
Length (m)	**6 mm**	**8 mm**	**10 mm**	**13 mm**	**16 mm**
1,0	2693406-1	2693408-1	2693410-1	2693413-1	2693416-1
1,5	2693406-1.5	2693408-1.5	2693410-1.5	2693413-1.5	2693416-1.5
2,0	2693406-2	2693408-2	2693410-2	2693413-2	2693416-2
2,5	2693406-2.5	2693408-2.5	2693410-2.5	2693413-2.5	2693416-2.5
3,0	2693406-3	2693408-3	2693410-3	2693413-3	2693416-3
3,5	2693406-3.5	2693408-3.5	2693410-3.5	2693413-3.5	2693416-3.5
4,0	2693406-4	2693408-4	2693410-4	2693413-4	2693416-4

Rema-10 chain sling 4-leg RMA with RCH



WLL (kg)	2.940 2.100	5.250 3.750	8.400 6.000	14.000 10.050	21.000 15.000
Length (m)	**6 mm**	**8 mm**	**10 mm**	**13 mm**	**16 mm**
1,0	2694106-1	2694108-1	2694110-1	2694113-1	2692416-1
1,5	2694106-1.5	2694108-1.5	2694110-1.5	2694113-1.5	2692416-1.5
2,0	2694106-2	2694108-2	2694110-2	2694113-2	2692416-2
2,5	2694106-2.5	2694108-2.5	264110-2.5	2694113-2.5	2692416-2.5
3,0	2694106-3	2694108-3	2694110-3	2694113-3	2692416-3
3,5	2694106-3.5	2694108-3.5	2694110-3.5	2694113-3.5	2692416-3.5
4,0	2694106-4	2694108-4	2694110-4	2694113-4	2692416-4

Rema-10 leg chain sling 4-leg RMA with RCS



WLL (kg)	2.940 2.100	5.250 3.750	8.400 6.000	14.000 10.050	21.000 15.000
Length (m)	**6 mm**	**8 mm**	**10 mm**	**13 mm**	**16 mm**
1,0	2694206-1	2694208-1	2694210-1	2694213-1	2694216-1
1,5	2694206-1.5	2694208-1.5	2694210-1.5	2694213-1.5	2694216-1.5
2,0	2694206-2	2694208-2	2694210-2	2694213-2	2694216-2
2,5	2694206-2.5	2694208-2.5	2694210-2.5	2694213-2.5	2694216-2.5
3,0	2694206-3	2694208-3	2694210-3	2694213-3	2694216-3
3,5	2694206-3.5	2694208-3.5	2694210-3.5	2694213-3.5	2694216-3.5
4,0	2694206-4	2694208-4	2694210-4	2694213-4	2694216-4

Rema-10 chain sling 4-leg RMA with RDG and RCH



WLL (kg)	2.940 2.100	5.250 3.750	8.400 6.000	14.000 10.050	21.000 15.000
Length (m)	**6 mm**	**8 mm**	**10 mm**	**13 mm**	**16 mm**
1,0	2694306-1	2694308-1	2694310-1	2694313-1	2694316-1
1,5	2694306-1.5	2694308-1.5	2694310-1.5	2694313-1.5	2694316-1.5
2,0	2694306-2	2694308-2	2694310-2	2694313-2	2694316-2
2,5	2694306-2.5	2694308-2.5	2694310-2.5	2694313-2.5	2694316-2.5
3,0	2694306-3	2694308-3	2694310-3	2694313-3	2694316-3
3,5	2694306-3.5	2694308-3.5	2694310-3.5	2694313-3.5	2694316-3.5
4,0	2694306-4	2694308-4	2694310-4	2694313-4	2694316-4

Rema-10 chain sling 4-leg RMA with RDG and RCS



WLL (kg)	2.940 2.100	5.250 3.750	8.400 6.000	14.000 10.050	21.000 15.000
Length (m)	**6 mm**	**8 mm**	**10 mm**	**13 mm**	**16 mm**
1,0	2694406-1	2694408-1	2694410-1	2694413-1	2694416-1
1,5	2694406-1.5	2694408-1.5	2694410-1.5	2694413-1.5	2694416-1.5
2,0	2694406-2	2694408-2	2694410-2	2694413-2	2694416-2
2,5	2694406-2.5	2694408-2.5	2694410-2.5	2694413-2.5	2694416-2.5
3,0	2694406-3	2694408-3	2694410-3	2694413-3	2694416-3
3,5	2694406-3.5	2694408-3.5	2694410-3.5	2694413-3.5	2694416-3.5
4,0	2694406-4	2694408-4	2694410-4	2694313-4	2694416-4

Rema-10 chain sling (1-leg) in box



These Rema G10 chain slings are supplied fully assembled in a robust plastic storage box.

The durable box protects the chain sling against dirt and moisture during transport and storage, and allows for safe and organised handling when not in use.

Rema-10 chain sling 1-leg in box RML with RCH



Boxed G10 single-leg chain sling with RML master link and RCH clevis sling hook; convenient kit packaging.

Type	WLL (kg)	Chain diameter (mm)	Working length (L) (m)	Article number
LENG/1.400KG-6MM-RML-RCH-1M	1.400	6	1	B2691106-1
LENG/2.500KG-8MM-RML-RCH-1M	2.500	8	1	B2691108-1
LENG/4.000KG-10MM-RML-RCH-1M	4.000	10	1	B2691110-1

Rema-10 chain sling 1-leg in box RML with RDG and RCH



Boxed G10 single-leg chain sling with RML master link, RDG clevis shortening hook, and RCH clevis sling hook.

Type	WLL (kg)	Chain diameter (mm)	Working length (L) (m)	Article number
LENG/1.400KG-6MM-RDG-RCH-2M	1.400	6	2	B2691306-2
LENG/2.500KG-8MM-RDG-RCH-2M	2.500	8	2	B2691308-2
LENG/4.000KG-10MM-RDG-RCH-2M	4.000	10	2	B2691310-2

Rema-10 chain sling 1-leg in box RML with RCS



Boxed G10 single-leg chain sling with RML master link and RCS self-locking clevis hook for added safety.

Type	WLL (kg)	Chain diameter (mm)	Working length (L) (m)	Article number
LENG/1.400KG-6MM-RML-RCS-1M	1.400	6	1	B2691206-1
LENG/2.500KG-8MM-RML-RCS-1M	2.500	8	1	B2691208-1
LENG/4.000KG-10MM-RML-RCS-1M	4.000	10	1	B2691210-1

Rema-10 chain sling 1-leg in box RML with RDG and RCS



Boxed G10 single-leg chain sling with RML master link, RDG clevis shortening hook, and RCS self-locking clevis hook.

Type	WLL (kg)	Chain diameter (mm)	Working length (L) (m)	Article number
LENG/1.400KG-6MM-RDG-RCS-2M	1.400	6	2	B2691406-2
LENG/2.500KG-8MM-RDG-RCS-2M	2.500	8	2	B2691408-2
LENG/4.000KG-10MM-RDG-RCS-2M	4.000	10	2	B2691410-2

Rema-10 chain sling (2-leg) in box



These Rema G10 two-leg chain slings are supplied fully assembled in a larger, robust plastic storage box.

The reinforced box provides sufficient space for the multi-leg assembly and protects the sling against dirt and moisture during transport and storage. It ensures practical and organised storage when the sling is not in use.

Rema-10 chain sling 2-leg in box RML with RCH



Boxed G10 two-leg chain sling with RML master link and RCH clevis sling hooks; ready-to-use set.

Type	WLL 0°- 45° (kg)	WLL 45°- 60° (kg)	Chain diameter (mm)	Working length (L) (m)	Article number
2-SPR./1.960KG-6MM-RML-RCH-1M	1.960	1.400	6	1	B2692106-1
2-SPR./3.500KG-8MM-RML-RCH-1M	3.500	2.500	8	1	B2692108-1
2-SPR./5.600KG-10MM-RML-RCH-1M	5.600	4.000	10	1	B2692110-1

Rema-10 chain sling 2-leg in box RML with RDG and RCH



Boxed G10 two-leg chain sling with RML master link, RDG clevis shortening hooks for leg adjustment, and RCH clevis sling hooks (with safety latch).

Type	WLL 0°- 45° (kg)	WLL 45°- 60° (kg)	Chain diameter (mm)	Working length (L) (m)	Article number
2-SPR./1.960KG-6MM-RDG-RCH-2M	1.960	1.400	6	1	B2692306-2
2-SPR./3.500KG-8MM-RDG-RCH-2M	3.500	2.500	8	1	B2692308-2
2-SPR./5.600KG-10MM-RDG-RCH-2M	5.600	4.000	10	1	B2692310-2

Rema-10 chain sling 2-leg in box RML with RCS



Boxed G10 two-leg chain sling with RML master link and RCS self-locking clevis hooks for enhanced safety during lifting.

Type	WLL 0°- 45° (kg)	WLL 45°- 60° (kg)	Chain diameter (mm)	Working length (L) (m)	Article number
2-SPR./1.960KG-6MM-RDG-RCS-2M	1.960	1.400	6	2	B2692406-2
2-SPR./3.500KG-8MM-RDG-RCS-2M	3.500	2.500	8	2	B2692408-2
2-SPR./5.600KG-10MM-RDG-RCS-2M	5.600	4.000	10	2	B2692410-2

Rema-10 chain sling 2-leg in box RML with RDG and RCS



Boxed G10 two-leg chain sling with RML master link, RDG clevis shortening hooks for leg adjustment, and RCS self-locking clevis hooks for maximum safety.

Type	WLL 0°- 45° (kg)	WLL 45°- 60° (kg)	Chain diameter (mm)	Working length (L) (m)	Article number
2-SPR./1.960KG-6MM-RDG-RCS-3M	1.960	1.400	6	3	B2692406-3
2-SPR./3.500KG-8MM-RDG-RCS-3M	3.500	2.500	8	3	B2692108-1
2-SPR./5.600KG-10MM-RDG-RCS-3M	5.600	4.000	10	3	B2692410-3

Rema 10 chain



G10 calibrated lifting chain, suitable for chain sling assemblies.

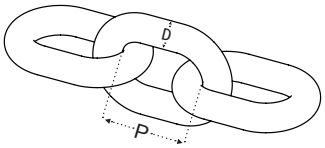

Type	WLL (kg)	BF (kN)	P (mm)	D (mm)	Weight (kg/pc/m)	Article number
REMA 10-6	1.400	56.5	18	6	0,8	**2610006**
REMA 10-8	2.500	101	24	8	1,5	**2610008**
REMA 10-10	4.000	157	30	10	2,3	**2610010**
REMA 10-13	6.700	265	39	13	4,0	**2610013**
REMA 10-16	10.000	402	48	16	6,0	**2610016**
REMA 10-20	16.000	628	60	20	8,9	**2610020**

Rema RML master link 1–2 leg (G10)



Forged G10 master link for 1- and 2-leg chain sling assemblies.

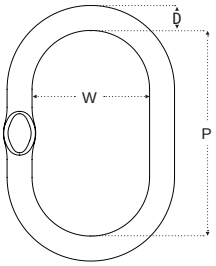

Type	WLL (kg)	P (mm)	D (mm)	W (mm)	Leng (mm)	2-leg (mm)	Weight (kg/pc/m)	Article number
RML-86	2.500	120	14,5	68,0	6/8	6	0,4	**2631006**
RML-108	4.000	140	16,5	78,5	10	8	0,7	**2631010**
RML-1310	7.500	160	22,0	93,0	13	10	1,5	**2631013**
RML-1613	10.000	195	27,0	108,0	16	13	2,3	**2631016**
RML-1916	17.000	250	35,0	140,0	19	16	5,1	**2631018**
RML-2220	28.000	250	42,0	150,0	22	20	7,7	**2631022**

Rema RMA master link 3–4 leg (G10)



Forged G10 master link for 3- and 4-leg chain sling assemblies.

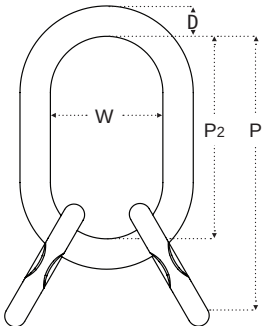

Type	WLL (kg)	P (mm)	D (mm)	P2 (mm)	W (mm)	3/4-sprong (mm)	Weight (kg/pc/m)	Article number
RMA-6	3.000	186	18,5	135	74,5	6	1,3	**2633006**
RMA-8	5.300	226	22,0	157	88,5	8	2,3	**2633008**
RMA-10	8.400	257	28,0	176	98,0	10	3,5	**2633010**
RMA-13	14.000	313	32,5	203	110,0	13	6,1	**2633013**
RMA-16	21.200	405	36,0	265	140,0	16	10,8	**2633016**
RMA-20	33.600	500	50,0	350	190,0	20	22,8	**2633020**

Rema RCX connecting link (G10)



G10 coupling link for safe and easy connection of components in chain sling assemblies.

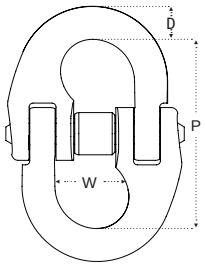

Type	WLL (kg)	P (mm)	D (mm)	W (mm)	Weight (kg/pc/m)	Article number
RCX-6	1.400	45,0	7,5	16,4	0,10	**2636006**
RCX-8	2.500	61,5	10,5	22,0	0,20	**2636008**
RCX-10	4.000	72,0	12,5	23,0	0,30	**2636010**
RCX-13	6.700	89,0	17,0	27,0	0,70	**2636013**
RCX-16	10.000	103,0	21,0	33,0	1,20	**2636016**
RCX-20	16.000	116,0	24,5	42,0	2,13	**2636020**

Rema RDG clevis shortening hook (G10)



G10 clevis shortening hook for leg length adjustment.

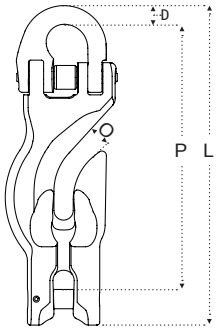

Type	WLL (kg)	P (mm)	D (mm)	O (mm)	L (mm)	Weight (kg/pc/m)	Article number
RDG-6	1.400	108,4	7,7	8,7	130,5	0,4	**2643006**
RDG-8	2.500	139,0	11,0	10,4	167,0	0,8	**2643008**
RDG-10	4.000	175,0	13,3	12,4	207,0	1,6	**2643010**
RDG-13	6.700	213,0	16,7	16,0	257,0	3,0	**2643013**
RDG-16	10.000	257,0	20,7	18,9	315,0	5,4	**2643016**

Rema RCH clevis sling hook (G10)



G10 clevis sling hook with safety latch.

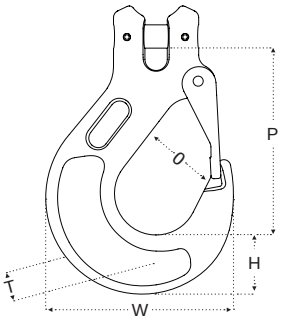

Type	WLL (kg)	P (mm)	T (mm)	H (mm)	O (mm)	W (mm)	Weight (kg/pc/m)	Article number
RCH-6	1.400	72,0	16	21,0	19,8	68,3	0,3	**2638006**
RCH- 8	2.500	87,3	19	27,0	26,3	86,8	0,7	**2638008**
RCH-10	4.000	102,5	26	34,3	28,2	105,6	1,2	**2638010**
RCH-13	6.700	129,5	33	42,5	39,0	131,5	2,3	**2638013**
RCH-16	10.000	157,0	40	49,7	45,6	159,0	4,1	**2638016**
RCH-20	16.000	241,0	64	56,0	52,0	-	7,3	**2638020**

Rema RCS self-locking clevis hook (G10)



G10 self-locking clevis hook; closes automatically under load for enhanced safety.

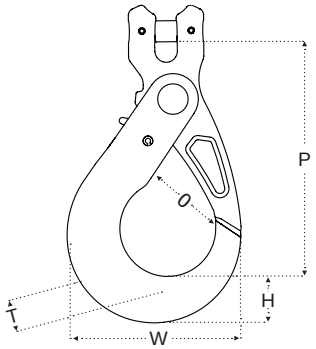

Type	WLL (kg)	P (mm)	T (mm)	H (mm)	O (mm)	W (mm)	Weight (kg/pc/m)	Article number
RCS-6	1.400	94	15,0	20,6	27,0	72,4	0,5	**2639006**
RCS-8	2.500	118	20,5	26,7	35,3	90,0	0,8	**2639008**
RCS-10	4.000	139	26,0	30,6	45,5	106,3	1,4	**2639010**
RCS-13	6.700	174	32,0	40,0	51,5	136,8	3,0	**2639013**
RCS-16	10.000	215	38,6	48,2	60,8	169,0	5,8	**2639016**

Rema REH eye hook (G10)



G10 eye hook with safety latch.

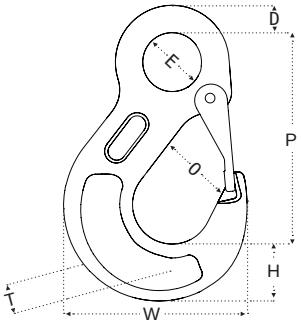

Type	WLL (kg)	P (mm)	D (mm)	E (mm)	T (mm)	H (mm)	O (mm)	W (mm)	Weight (kg/pc/m)	Article number
REH-6	1.400	80,3	9,8	20,4	15,9	21	19,4	68,5	0,3	**2644006**
REH-8	2.500	97,4	11,3	24,0	18,8	28	27,5	88,3	0,5	**2644008**
REH-10	4.000	118,6	16,7	34,0	25,0	34	29,5	106,7	1,1	**2644010**
REH-13	6.700	153,5	18,8	42,4	33,0	43	38,8	135,2	2,2	**2644013**
REH-16	10.000	182,0	25,3	49,5	39,7	50	45,4	161,0	3,7	**2644016**

Rema RES self-locking eye hook (G10)



G10 eye hook with self-locking hook for secure load handling.

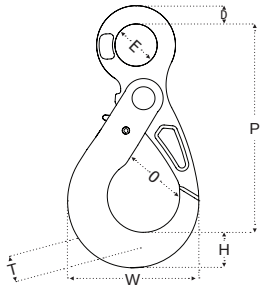

Type	WLL (kg)	P (mm)	D (mm)	E (mm)	T (mm)	H (mm)	O (mm)	W (mm)	Weight (kg/pc/m)	Article number
RES-6	1.400	107,6	11,3	20,8	15,1	22,3	28,0	72,0	0,5	**2645006**
RES-8	2.500	135,4	12,1	27,2	20,2	25,7	35,5	89,5	0,8	**2645008**
RES-10	4.000	165,0	15,6	33,8	26,4	30,0	45,0	107,2	1,4	**2645010**
RES-13	6.700	202,0	20,5	40,0	32,2	41,8	51,0	138,8	2,9	**2645013**
RES-16	10.000	250,0	27,3	49,6	38,3	50,0	60,0	170,0	5,6	**2645016**

Rema RSS swivel self-locking hook (G10)



G10 swivel self-locking hook for secure load handling. Hook closes automatically under load and allows rotation to prevent chain twisting.

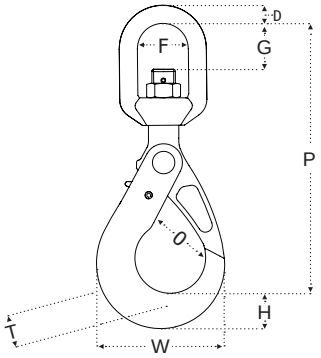

Type	WLL (kg)	P (mm)	D (mm)	F (mm)	G (mm)	T (mm)	H (mm)	O (mm)	W (mm)	Weight (kg/pc/m)	Article number
RSS-6	1.400	150	11,3	32,8	25,7	15,1	21,6	26,8	72,2	0,7	**2646006**
RSS-8	2.500	182	13,5	36,8	27,5	20,5	26,6	35,5	89,3	1,2	**2646008**
RSS-10	4.000	220	15,8	41,0	35,9	26,7	31,0	44,1	106,9	2,0	**2646010**
RSS-13	6.700	265	17,4	47,8	40,0	32,5	42,3	50,5	137,5	3,7	**2646013**
RSS-16	10.000	332	21,2	69,5	56,0	38,9	50,0	59,6	169,0	7,3	**2646016**

Rema RSBS swivel self-locking hook (G10)



G10 swivel eye hook with self-locking hook for safe load handling and is rotatable under load.

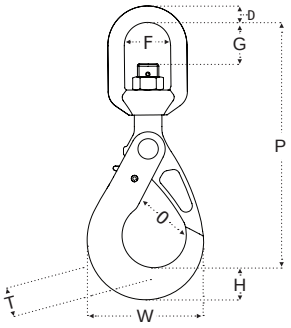

Type	WLL (kg)	P (mm)	D (mm)	F (mm)	G (mm)	O (mm)	W (mm)	Weight (kg/pc/m)	Article number
RSBS-6	1.400	195	14,0	37	32	26,8	72,2	0,8	**2646106**
RSBS-8	2.500	202	15,0	41	39	35,5	89,3	1,2	**2646108**
RSBS-10	4.000	244	17,5	48	48	44,1	106,9	2,2	**2646110**
RSBS-13	6.700	292	19,0	55	57	50,5	137,5	4,4	**2646113**
RSBS-16	10.000	346	26,0	62	62	59,6	169,0	7,5	**2646116**

Rema REGN shortening eye hook (G10)



G10 shortening eye hook for chain length adjustment in sling assemblies.

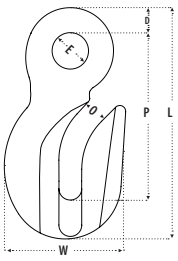

REGN

Type	WLL (kg)	P (mm)	D (mm)	E (mm)	L (mm)	O (mm)	W (mm)	Weight (kg/pc/m)	Article number
REGN-6	1.400	45,3	9,5	15,0	88,5	8,5	44	0,26	**2648206**
REGN-8	2.500	60,3	12,0	15,9	110,6	10,5	55,6	0,52	**2648208**
REGN-10	4.000	82,7	15,0	20,6	134,5	13,3	69,8	1,00	**2648210**
REGN-13	6.700	103,5	20,4	26,9	175,0	15,9	92,0	2,26	**2648213**
REGN-16	10.000	118,0	23,0	35,0	210,0	19,3	100,0	3,48	**2648216**

Rema REGS shortening eye hook with safety pin (G10)



G10 shortening eye hook with safety pin to prevent accidental release.

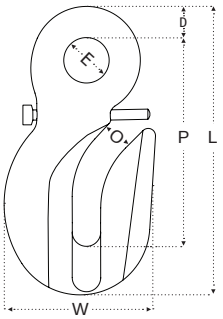

Type	WLL (kg)	P (mm)	D (mm)	E (mm)	L (mm)	O (mm)	W (mm)	Weight (kg/pc/m)	Article number
REGS-8	2.500	74,3	12,0	15,9	110,6	10,5	55,6	0,5	**2648108**
REGS-10	4.000	91,5	14,5	20,6	134,5	13,3	69,8	1,0	**2648110**
REGS-13	6.700	120,0	20,4	26,9	175,0	15,9	91,6	2,2	**2648113**

Rema RCG shortening grab hook (G10)



G10 clevis grab hook for shortening or direct attachment to chain.

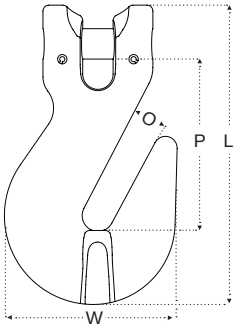

Type	WLL (kg)	P (mm)	L (mm)	O (mm)	W (mm)	Weight (kg/pc/m)	Article number
RCG-6	1.400	43,9	77,3	7,5	41,6	0,2	**2642006**
RCG-8	2.500	52,2	92,6	10,3	53,3	0,4	**2642008**
RCG-10	4.000	72,3	126,5	13,3	72,2	0,9	**2642010**
RCG-13	6.700	90,0	163,0	16,7	96,2	1,9	**2642013**
RCG-16	10.000	101,0	185,0	19,3	112,3	3,3	**2642016**

Rema RCCS shortening claw with safety pin (G10)



G10 shortening claw with safety pin for secure leg length adjustment.

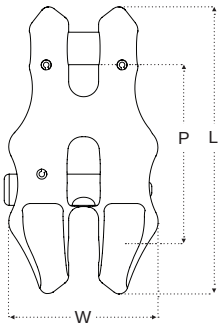

Type	WLL (kg)	P (mm)	W (mm)	L (mm)	Weight (kg/pc/m)	Article number
RCCS-8	2.500	63,3	50	91,5	0,4	**2651008**
RCCS-10	4.000	81,0	59	113,0	0,8	**2651010**
RCCS-13	6.700	105,0	79	149,0	1,7	**2651013**

Rema-10 towing chain assembly (G10)

Rema G10 towing chain assembly from the Rema 10 programme.

Designed for heavy-duty towing, securing and recovery applications. The assembly is manufactured from G10 components, offering high strength, reduced weight and excellent durability under demanding conditions.

Supplied as a complete ready-to-use assembly.

Type	WLL (kg)	Article number
REMA 10MM	4.000	**2629030**

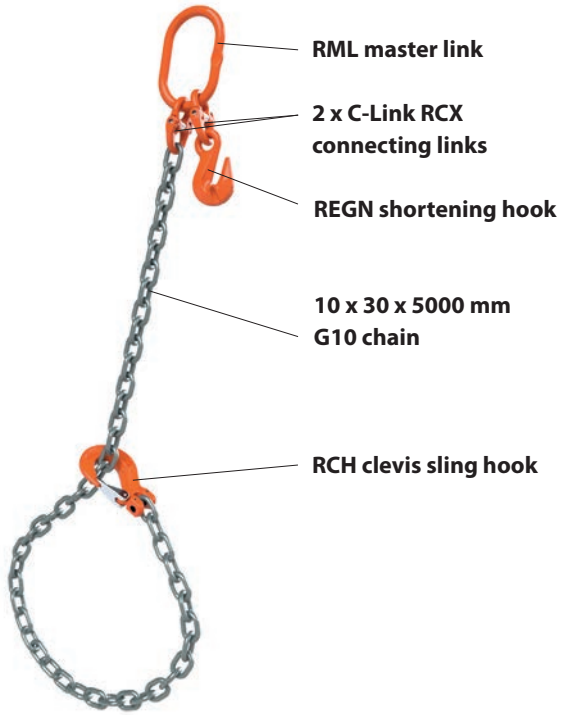

Configurations

The configurations shown represent typical setup options for the Rema G10 towing chain.

Depending on the required connection method and chain length adjustment, the assembly can be configured using shortening hooks, master links or sling hooks to ensure correct load alignment and secure force transmission during towing and recovery operations.


Choker configuration with sling hook


Shortening with grab hook


Choker configuration with master link


Fixed loop with shortening hook

Rema WCL round sling coupling (G10)



G10 coupling link designed for connecting round slings to chain components.

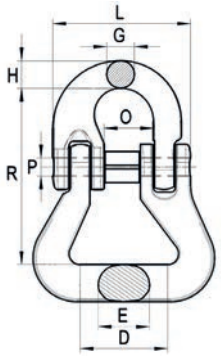

Type	WLL (kg)	D (mm)	E (mm)	G (mm)	H (mm)	O (mm)	R (mm)	P x L (mm)	Weight (kg)	Article number
WCL-8	2.500	30	18,0	10,0	11,5	18,0	66	6,3 x 53,0	0,3	**2683008**
WCL-10	4.000	40	22,0	12,6	12,6	22,5	81	8,0 x 63,0	0,6	**2683010**
WCL-13	6.700	50	27,5	16,7	19,0	27,5	104	10,0 x 79,0	1,1	**2683013**

Rema RWSH galvanized latch set



Galvanized replacement latch set for RCH hooks.

Type	Article number
RWSH-1	**2688501**
RWSH-2	**2688502**
RWSH-3	**2688503**

Rema RCX RDG chain pin (G10)



G10 replacement pin for RCX connecting links and RDG shortening hooks.

Type	Article number
RCX/RDG-6	**2688206**
RCX/RDG-8	**2688208**
RCX/RDG-10	**2688210**
RCX/RDG-13	**2688213**
RCX/RDG-16	**2688216**

Rema RCH REH galvanized latch set (G10)



G10 galvanized replacement latch set for RCH and REH hooks.

Type	Article number
RCH/REH-6	**2688006**
RCH/REH-8	**2688008**
RCH/REH-10	**2688010**
RCH/REH-13	**2688013**
RCH/REH-16	**2688016**

Rema RCH RCS RCG RCCS locking pin (G10)



G10 replacement locking pin set for RCH, RCS, RCG, and RCCS hooks.

Type	Article number
RCH/RCS/RCG/RCCS-6	**2688306**
RCH/RCS/RCG/RCCS-8	**2688308**
RCH/RCS/RCG/RCCS-10	**2688310**
RCH/RCS/RCG/RCCS-13	**2688313**
RCH/RCS/RCG/RCCS-16	**2688316**

Rema RCS RES RSS RSBS safety latch set (G10)



G10 replacement safety latch set for RCS, RSBS, RES and RSS hooks.



Type	G-I (Gen 1)	G-II (Gen 2)	G-III (Gen 3)
RCS/RSBS/RES/RSS-6	**2688131**	**2688141**	**2688106**
RCS/RSBS/RES/RSS-8	**2688133**	**2688143**	**2688108**
RCS/RSBS/RES/RSS-10	**2688135**	**2688145**	**2688110**
RCS/RSBS/RES/RSS-13	**2688137**	**2688147**	**2688113**
RCS/RSBS/RES/RSS-16	**2688139**	**-**	**2688116**

Selection guide

G10	Component size	Batch number		
		G-I (Gen 1)	G-II (Gen 2)	G-III (Gen 3)
RCS-RSBS-RES-RSS	**6 mm**	P1, q1, q2, r1, r4.	s3, s4, v1, T1, T2, U1.	U2, U4.
	8 mm	P1, q1, q5, r2, r4.	s4, v1.	T1, T5, U1, U2, U4, V3.
	10 mm	P1, q1, q5, r1, r3, r4.	r6, s4, v1.	T1, T3, T4, U1, U3, U4, V3.
	13 mm	P1, q1, q5, r1, r2, r3, r4.	s4, v1, T1, T4.	T5, U1, U4, V3.
	16 mm	P1, q1, r4.	T4	V3

Rema REGS safety pin (G10)

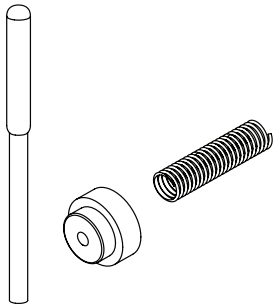

G10 replacement safety pin set for REGS shortening hooks.
Supplied as a complete replacement set including pin and spring.

Type	Article number
REGS-8	**2688408**
REGS-10	**2688410**
REGS-13	**2688413**

Rema 10 identification tag 1-2-3-4 leg slings (G10)



G10 steel identification tag for chain slings (1- to 4-leg assemblies).
Used for marking WLL, traceability and inspection information.

Type	Description	Article number
R10L-1234	Label 1-2-3-4 leg chain slings	**2690010**

Rema aluminium tag



Blank aluminium identification tag supplied with steel wire attachment cable.

Suitable for marking, certification and traceability purposes.

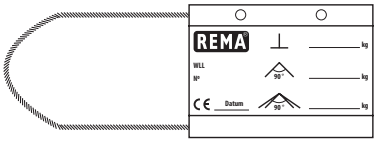

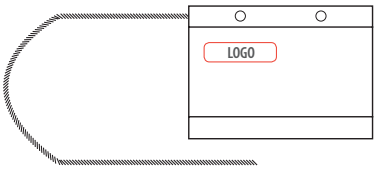

Type	Omschrijving	Article number
REMA TAG	REMA TAG aluminium label	**2690050**

Rema seal



Plastic inspection seal supplied with steel wire cable for secure attachment.
Used for inspection and certification control with year-based colour coding.

Article number	Type	Color
3100005	Seal 2025 -2031	**Green**
3100000	Seal 2026 - 2032	**Brown**
3100001	Seal 2027 - 2033	**Blue**
3100002	Seal 2028 - 2034	**Yellow**
3100003	Seal 2029 - 2035	**Red**
3100004	Seal 2030 - 2036	**Black**

Features Rema Stainless Steel (G6)

- Suitable for use in corrosive environments
- Suitable for higher ambient temperatures (-45°C up to +350°C)

Applications

Food industry, corrosive environments, purification plants, fisheries, meat processing industry, etc.

Rema Stainless Steel working load table

		Single leg		2-leg				3–4-leg		Endless
Veiligheidsfactor 4				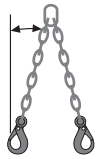		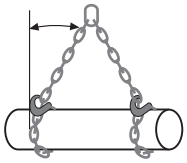		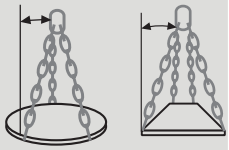		
Angle		-	-	0 - 45°	45° - 60°	0 - 45°	45° - 60°	0 - 45°	45° - 60°	-
Load factor		1	0,8	1,4	1	1,12	0,8	2,1	1,5	1,6
Type	**Ø**	**WLL**								
REMA RVS - 6	**6**	**900**	**720**	**1260**	**900**	**1008**	**720**	**1890**	**1350**	**1440**
REMA RVS - 7	**7**	**1250**	**1000**	**1750**	**1250**	**1400**	**1000**	**2625**	**1875**	**2000**
REMA RVS - 8	**8**	**1600**	**1280**	**2240**	**1600**	**1792**	**1280**	**3360**	**2400**	**2560**
REMA RVS - 10	**10**	**2500**	**2000**	**3500**	**2500**	**2800**	**2000**	**5250**	**3750**	**4000**
REMA RVS - 13	**13**	**4250**	**3400**	**5950**	**4250**	**4760**	**3400**	**8925**	**6375**	**6800**

Applicable standards: EN 818 and EN 1677.

General use

If chains and/or components are used under exceptional or difficult conditions (extreme temperatures, asymmetrical loading, angular loading or dynamic loading), the values in the table above must be reduced using the load factors stated below.

Temperature	The use of Rema stainless steel products is not permitted at temperatures below -45°C or above +400°C.		
Load factor for Rema stainless steel	1		
Asymmetrical load distribution	Always assume a 1-leg condition; if in doubt, always apply the 1-leg load factor.		
Angular loading (d = thickness of the material)	R > 2 × d 	R > d 	R < d 
Load factor	1	0,7	0,5

Shock loading

Crane operators must take into account the risk of shock loading. Due to shock loading, a chain may break even if the load weight is well below the maximum working load of the chain.

A high acceleration or shock load can be caused by sudden crane movement. Avoid snatch loading, which occurs when the chain is suddenly tensioned with high force. Sudden impact caused by a falling load may create hazardous situations.

Shock load level	Light shocks	Medium shocks	Heavy shocks
Lastfactor	1	0,7	Not permitted

Rema RC stainless steel chain AISI 316 (G6)



Grade 6 stainless steel lifting chain, manufactured from AISI 316 for corrosion resistance in marine and chemical environments.

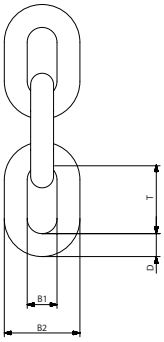

Type	WLL (kg)	B1 (mm)	B2 (mm)	D (mm)	T (mm)	Weight (kg)	Article number
RC 6 x 18	900	8,0	22,2	6	18	0,58	**2686006**
RC 7 x 21	1.250	9,1	25,9	7	21	1,11	**2686007**
RC 8 x 24	1.600	10,4	29,6	8	24	1,68	**2686008**
RC 10 x 30	2.500	14,0	37,0	10	30	2,25	**2686010**
RC 13 x 39	4.250	16,9	48,1	13	39	3,77	**2686013**

Rema RCM stainless steel master link AISI 316 (G6)



Grade 6 forged stainless steel master link (AISI 316) for 1- and 2-leg chain sling assemblies.

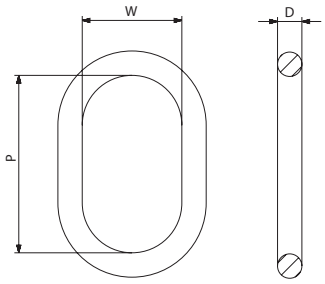

Type	WLL (kg)	P (mm)	D (mm)	W (mm)	Leng (mm)	2-leg (mm)	Weight (kg)	Article number
RCM0706-7/6	1.600	110	13	60	6/7	6	0,34	**2686106**
RCM0808-8/-	1.600	110	13	60	8	-	0,34	**2686107**
RCM1008-10/7-8	2.600	110	16	60	10	7/8	0,53	**2686108**
RCM1310-13/10	4.250	135	18	75	13	10	0,80	**2686110**
RCM1613-16/13	6.300	160	22	90	16	13	1,50	**2686113**

Rema RCMC stainless steel master link 3–4 leg AISI 316 (G6)



Grade 6 forged stainless steel master link (AISI 316) for 3- and 4-leg chain sling assemblies.

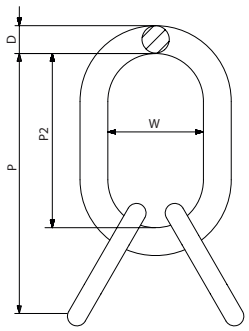

Type	WLL (kg)	P (mm)	D (mm)	P2 (mm)	W (mm)	3-4 leg (mm)	Weight (kg)	Article number
RCMC06-6MM	1.700	154	13	110	60	6	0,52	**2686206**
RCMC07-7MM	2.600	164	16	110	60	7	0,97	**2686207**
RCMC08-8MM	3.350	205	18	135	75	8	1,60	**2686208**
RCMC10-10MM	5.250	245	22	160	90	10	2,76	**2686210**
RCMC13-13MM	8.900	295	26	180	100	13	4,45	**2686213**

Rema RCL stainless steel C-link AISI 316 (G6)



Grade 6 stainless steel connecting link (AISI 316) for assembly of chain sling components.

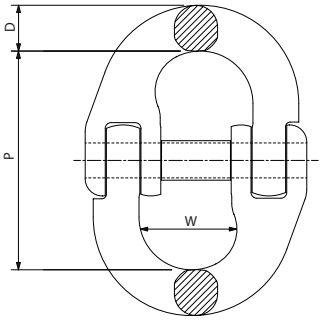

Type	WLL (kg)	P (mm)	D (mm)	W (mm)	Weight (kg)	Article number
RCL06-6MM	900	45,0	7,5	18,0	0,1	**2686306**
RCL07-7MM	1.250	50,5	9,0	20,5	0,2	**2686307**
RCL08-8MM	1.600	62,0	10,0	23,5	0,3	**2686308**
RCL10-10MM	2.500	72,0	12,6	27,5	0,7	**2686310**
RCL13-13MM	4.250	87,5	16,7	33,5	1,2	**2686313**

Rema RCB stainless steel clevis grab hook AISI 316 (G6)



Grade 6 stainless steel clevis grab hook (AISI 316) for shortening chain slings.

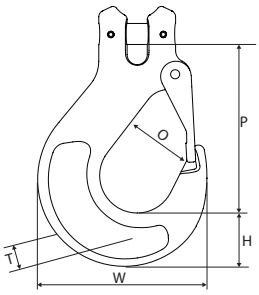

Type	WLL (kg)	P (mm)	T (mm)	H (mm)	O (mm)	W (mm)	Weight (kg)	Article number
RCB06SF-6/5MM	900	81	14	21	28	73	0,4	**2686506**
RCB07SF-7MM	1.250	112	20	30	38	102	0,8	**2686507**
RCB08SF-8MM	1.600	112	20	30	38	102	0,8	**2686508**
RCB10SF-10MM	2.500	123	28	34	46	119	1,5	**2686510**

Rema RCA stainless steel eye hook AISI 316 (G6)



Grade 6 stainless steel eye sling hook (AISI 316) for lifting applications.

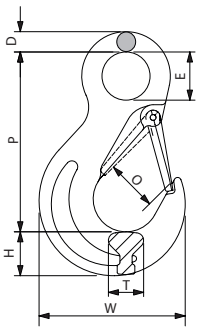

Type	WLL (kg)	P (mm)	D (mm)	E (mm)	T (mm)	H (mm)	O (mm)	W (mm)	Weight (kg)	Article number
RCA06SF-6/5MM	900	90	8	21	13,5	21	23	72	0,3	**2686406**
RCA08SF-8/7MM	1.600	118	13	27	19,5	29	27	103	0,6	**2686408**
RCA10SF-10MM	2.500	140	15	37	27,0	33	39	120	0,3	**2686410**
RCA13SF-13MM	4.250	182	18	48	35,0	46	51	155	2,2	**2686413**

Rema RAC stainless steel shortening clutch AISI 316 (G6)



Grade 6 stainless steel shortening clutch (AISI 316) for safe leg length adjustment in chain slings.

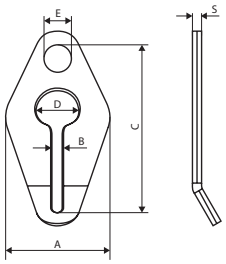

Type	WLL (kg)	A (mm)	B (mm)	C (mm)	D (mm)	E (mm)	S (mm)	Weight (kg)	Article number
RAC06-6/5	900	55	8	81	26	16	8,5	0,20	**2686606**
RAC08-8/7	1.600	71	11	110	34	22	10,5	0,57	**2686608**
RAC10-10	2.500	90	12	135	40	26	13,0	1,06	**2686610**
RAC13-13	4.250	112	17	170	52	32	16,5	2,20	**2686613**

Rema RSH stainless steel D-shackle AISI 316 (G6)



Grade 6 stainless steel D-shackle (AISI 316) for connecting components.

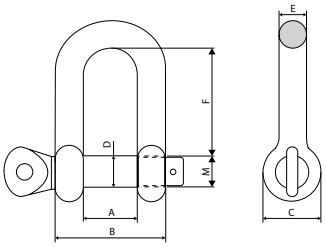

Type	WLL (kg)	A (mm)	B (mm)	C (mm)	D (mm)	E (mm)	F (mm)	M (mm)	Weight (kg)	Article number
RSH005 500 KG	500	18	34	18	9	8	33	M10	0,07	**2686901**
RSH012 1.250 KG	1.250	25	49	25	13	12	40	M14	0,22	**2686903**
RSH020 2.000 KG	2.000	32	64	32	17	16	60	M18	0,52	**2686905**
RSH032 3.200 KG	3.200	41	79	47	21	19	78	M22	0,80	**2686907**
RSH050 5.000 KG	5.000	56	106	60	29	25	109	M30	2,20	**2686909**

Rema RTI stainless steel identification tag AISI 316 (G6)



Grade 6 stainless steel identification tag (AISI 316) for chain sling assemblies.

Type	Description	Article number
RTI01	Stainless steel tag for 1-leg sling	**2690020**
RTI02 2-3-4	Stainless steel tag for 2–3–4 leg sling	**2690021**

Rema stainless steel chain AISI 316 (not for lifting purposes)



General-purpose stainless steel chain, AISI 316. Corrosion-resistant, suitable for securing, lashing and general applications. Not certified for lifting.

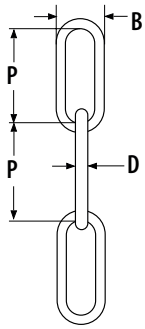

Type	WLL (kg)	B (mm)	D (mm)	P (mm)	Weight (kg)	Article number
4 x 32	100	16	4	32	0,28	**2686509**
5 x 35	160	20	5	35	0,28	**2686511**
8 x 52	400	32	8	52	1,13	**2686515**

Rema stainless steel oval carabiner AISI 316 (not for lifting purposes)



General-purpose stainless steel oval carabiner, AISI 316. Used for quick connections and securing applications. Not certified for lifting.

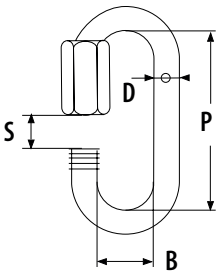

Type	WLL (kg)	D (mm)	B (mm)	P (mm)	S (mm)	Weight (kg/pc/m)	Article number
OK-4MM	250	4	12	32	5,5	0,01	**2685704**
OK-5MM	375	5	13	39	6,5	0,02	**2685705**
OK-6MM	500	6	14	45	7,5	0,04	**2685706**
OK-8MM	1.000	8	18	58	9,5	0,08	**2685708**
OK-10MM	1.250	10	22	69	12,0	0,14	**2685710**

Rema stainless steel D-shackle AISI 316 (not for lifting purposes)



General-purpose stainless steel D-shackle, AISI 316. For securing and connection tasks only, not certified for lifting.

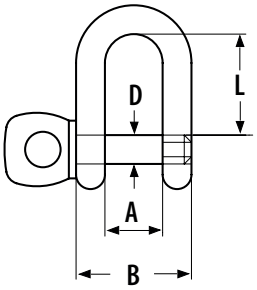

Type	WLL (kg)	A (mm)	B (mm)	D (mm)	L (mm)	Weight (kg)	Article number
D-4 D-shackle	180	8	16	4	14,0	0,01	**2685604**
D-5 D-shackle	220	10	20	5	14,5	0,02	**2685605**
D-6 D-shackle	260	12	24	6	21,0	0,02	**2685606**
D-8 D-shackle	420	16	32	8	28,0	0,06	**2685608**
D-10 D-shackle	560	20	40	10	36,0	1,13	**2685610**
D-12 D-shackle	1.040	24	48	12	44,0	0,20	**2685612**

Rema stainless steel carabiner AISI 316 (not for lifting purposes)



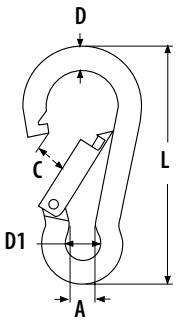

Type	WLL (kg)	A (mm)	D (mm)	D1 (mm)	L (mm)	Weight (kg)	Article number
K-5MM	100	6	5	10	50	0,02	**2685805**
K-6MM	150	8	6	11	60	0,02	**2685806**
K-8MM	288	8	8	13	80	0,06	**2685808**
K-10MM	363	10	10	16	100	0,12	**2685810**

C806XHT lifting point (G10)



Features

– 360° rotatable.
– 90° pivoting.
– Fourfold safety in load direction.
– Not rotatable under load.

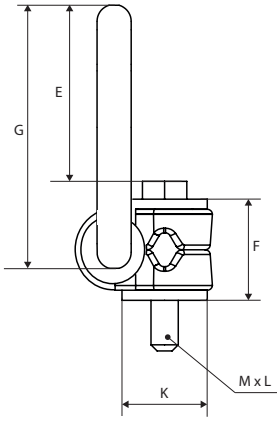

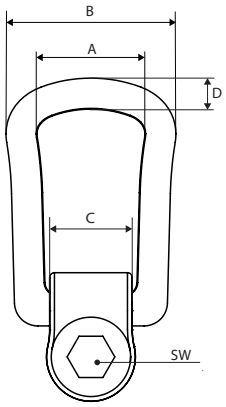

Type	WLL (kg)	A (mm)	B (mm)	C (mm)	D (mm)	E (mm)	G (mm)	K (mm)	M (mm)	L (mm)	SW (mm)	Weight (kg)	Article number
C806XHT-M8x15-0.5T	500	34	57	24	10,0	43	78	25	M8	15	13	0,29	**2612208**
C806XHT-M10x15-0.9T	900	34	57	24	10,0	42	78	25	M10	15	17	0,29	**2612210**
C806XHT-M12x23-1.35T	1.350	38	66	30	13,5	40	85	32	M12	23	19	0,50	**2612212**
C806XHT-M16x24-2T	2.000	38	66	30	13,5	38	85	32	M16	24	24	0,51	**2612216**
C806XHT-M20x31-3.5T	3.500	55	87	48	16,0	54	111	32	M20	31	30	1,25	**2612220**
C806XHT-M24x37-4.5T	4.500	55	87	48	16,0	51	111	45	M24	37	36	1,30	**2612224**
C806XHT-M30x45-6.7T	6.700	66	109	54	22,5	62	145	60	M30	45	46	3,25	**2612230**
C806XHT-M36x50-7.0T	7.000	66	109	54	22,5	60	145	60	M36	50	55	3,30	**2612236**
C806XHT-M42x75-10T	10.000	78	136	62	28,0	86	190	70	M42	75	65	6,50	**2612242**
C806XHT-M42x63-15T	15.000	97	169	68	36,0	121	242	85	M42	63	65	11,20	**2612243**

C811XHT/C812X lifting point (G10)



C811XHT



C812X

Features

– 360° rotatable.
– 90° pivoting.
– C811XHT: fourfold safety in load direction.
– C812X: fivefold safety in load direction.
– Not rotatable under load.

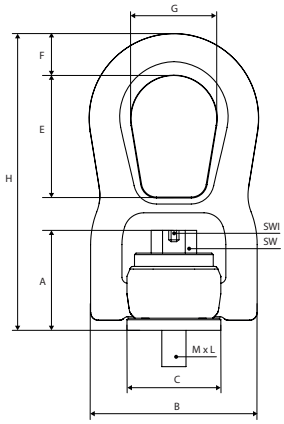

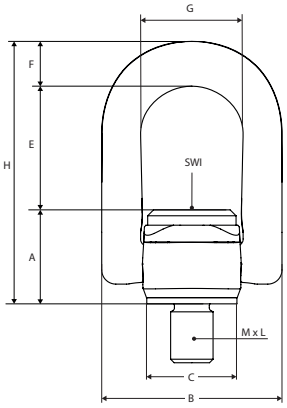

Type	WLL (kg)	A (mm)	B (mm)	C (mm)	E (mm)	F (mm)	G (mm)	H (mm)	M (mm)	L (mm)	SW (mm)	SWI (mm)	Weight (kg)	Article number
C811XHT-M8x12-0.5T	500	33,5	56,0	30,0	40	14	28	99,0	M8	12	13	5	0,38	**2612308**
C811XHT-M10x15-0.9T	900	34,5	56,0	30,0	40	14	28	99,0	M10	15	17	6	0,38	**2612310**
C811XHT-M12x18-1.35T	1.350	35,5	56,0	30,0	40	14	28	99,0	M12	18	19	7	0,38	**2612312**
C811XHT-M16x25-2.5T	2.500	46,5	74,5	47,0	55	18	38	135,5	M16	25	24	10	1,04	**2612316**
C811XHT-M20x30-4T	4.000	43,0	74,0	45,0	55	18	38	135,5	M20	30	24	10	1,30	**2612320**
C811XHT-M24x36-6.3T	6.300	64,5	106,0	62,0	84	25	56	198,5	M24	36	36	14	4,00	**2612324**
C811XHT-M30x45-8T	8.000	68,0	106,0	62,0	84	25	56	198,5	M30	45	46	17	4,00	**2612330**
C812X-M36x54-10T	10.000	80,0	150,0	76,5	108	32	85	220,0	M36	54	-	17	6,00	**2611336**
C812X-M42x63-12.5T	12.500	80,0	150,0	76,5	108	32	85	220,0	M42	63	-	17	6,00	**2611342**
C812X-M48x68-17T	17.000	90,0	176,0	95,0	128	39	100	257,0	M48	68	-	17	10,50	**2611348**
C812X-M56x78-25T	25.000	90,0	176,0	95,0	126	39	100	257,0	M52	78	-	17	10,50	**2611356**
C812X-M64x90-35T	35.000	105,0	200,0	110,0	126	46	113	277,0	M64	90	-	19	16,30	**2611364**

C800X lifting point (G10)



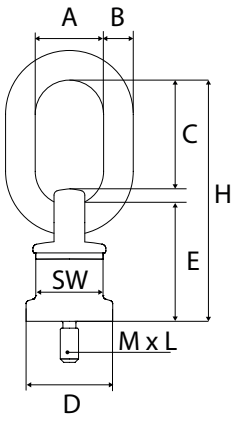

Features
– 360° rotatable.
– 180° pivoting.
– Bearing-mounted.
– Fourfold safety in all load directions.

Type	WLL (kg)	A (mm)	B (mm)	C (mm)	D (mm)	E (mm)	H (mm)	M x L (mm)	SW (mm)	Weight (kg)	Article number
C800X-M8x18-0.3T	300	30	13	46	38	50	105	M8 x 18	30	0,48	**2611108**
C800X-M10x18-0.5T	500	30	13	46	38	50	105	M10 x 18	30	0,48	**2611110**
C800X-M12x18-0.7T	700	30	13	46	38	50	105	M12 x 18	30	0,50	**2611112**
C800X-M16x20-1.4T	1.400	30	13	46	38	50	105	M16 x 20	30	0,53	**2611116**
C800X-M20x30-2.5T	2.500	34	16	57	50	61	131	M20 x 30	40	1,05	**2611120**
C800X-M24x30-4.0T	4.000	40	18	70	58	68	153	M24 x 30	48	1,63	**2611124**
C800X-M30x35-6.7T	6.700	45	22	65	80	71	156	M30 x 35	70	2,85	**2611130**
C800X-M36x54-10T	10.000	50	23	91	90	86	200	M36 x 54	80	4,62	**2611136**
C800X-M42x63-12.5T	12.500	50	23	91	90	86	200	M42 x 63	80	5,20	**2611142**
C800X-M48x72-12.5T	12.500	50	23	91	90	86	200	M48 x 72	80	5,20	**2611148**

C807X KEY lifting point (G10)



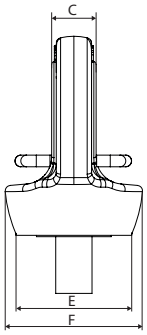

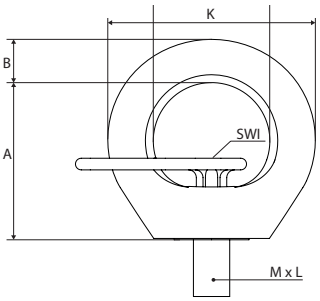

Features
- 360° rotatable.
- Hand-tightened in load direction.
- Fourfold safety factor.
- Not rotatable under load.

Type	WLL (kg)	A (mm)	B (mm)	C (mm)	D (mm)	E (mm)	F (mm)	K (mm)	M x L (mm)	SW (mm)	Weight (kg)	Article number
C807X+KEY-M8x12-0.3T	300	35,0	11,0	9,0	25	25	30,0	47,0	M8 x 12	6	0,12	**2611408**
C807X+kEY-M10x15-0.4T	400	35,0	11,0	9,8	25	25	30,0	47,0	M10 x 15	6	0,12	**2611410**
C807X+KEY-M12x18-0.75T	750	43,0	12,5	11,5	30	30	36,5	55,5	M12 x 18	8	0,2	**2611412**
C807X+KEY-M16x24-1.5T	1.500	49,5	14,5	15,7	35	35	41,8	64,8	M16 x 24	8	0,35	**2611416**
C807X+KEY-M20x30-2.3T	2.300	58,0	16,0	18,0	40	42	51,5	74,5	M20 x 30	10	0,6	**2611420**
C807X+KEY-M24x36-3.2T	3.200	69,0	20,5	22,0	49	50	58,0	90,0	M24 x 36	12	1,0	**2611424**
C807X+KEY-M30x45-4.5T	4.500	86,0	25,5	28,0	60	66	73,0	111,0	M30 x 43	17	2,0	**2611430**
C807X+KEY-M36x54-7.0T	7.000	107,0	32,0	32,0	74	75	96,5	135,0	M36 x 54	22	3,4	**2611436**
C807X+KEY-M42x64-9.0T	9.000	120,0	38,0	40,5	82	85	110,0	158,0	M42 x 64	24	5,7	**2611442**
C807X+KEY-M48x72-12T	12.000	139,0	43,0	44,0	95	100	124,5	179,0	M48 x 72	27	8,5	**2611448**

C810FX lifting nut (G10)



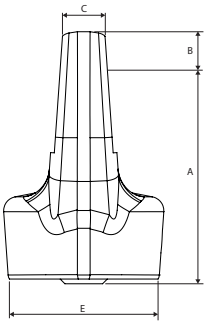

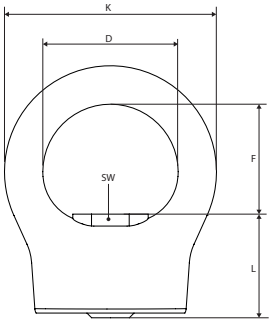

Features
- 360° rotatable.
- Hand-tightened in load direction.
- Not rotatable under load.
- Minimum G10.9.

Type	WLL (kg)	A (mm)	B (mm)	C (mm)	D (mm)	E (mm)	F (mm)	K (mm)	M x L (mm)	SW (mm)	Weight (kg)	Article number
C810FX-M8-0.3T	300	44,5	8	10,0	29	32	23	45	M8 x 21,5	13	0,17	**2611508**
C810FX-M10-0.4T	400	44,5	8	10,0	29	32	23	45	M10 x 21,5	14	0,20	**2611510**
C810FX-M12-0.75T	750	53,5	11	11,0	34	44	27	56	M12 x 26,5	16	0,39	**2611512**
C810FX-M16-1.5T	1.500	59,5	13	14,5	39	56	29	65	M16 x 30,5	21	0,69	**2611516**
C810FX-M20-2.3T	2.300	67,0	14	17,0	42	58	34	70	M20 x 33,0	26	0,71	**2611520**
C810FX-M24-3.2T	3.200	80,0	18	19,0	52	73	40	30	M24 x 40,0	30	1,70	**2611524**
C810FX-M30-4.5T	4.500	101,0	22	27,0	62	80	50	106	M30 x 51,0	36	2,44	**2611530**

C835X lifting eye point (G10)



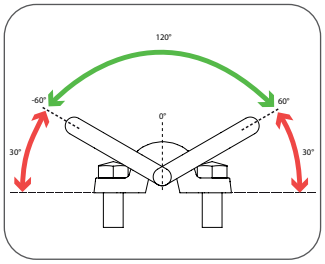

Features
– 120° pivoting.
– Loadable in tilting direction.
– Bolt-on design for machinery or vehicle applications.

Options
- Higher capacities available on request.

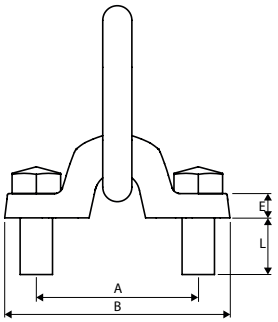

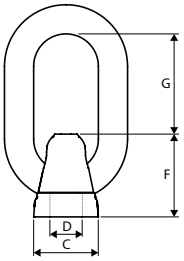

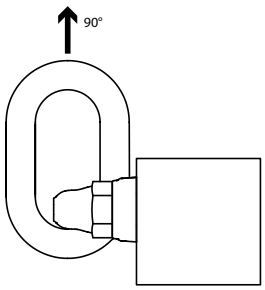

Type	WLL (kg)	A (mm)	B (mm)	C (mm)	D (mm)	E (mm)	F (mm)	G (mm)	L (mm)	Lifting eye dimension (mm)	Weight (kg)	Article number
C835-M20-4.000KG	4.000	100	138,0	39	21,5	15	57	61	35	18 x 85 x 40	1,2	**2676110**
C835-M24-6.700KG	6.700	120	165,5	48	25,5	19	63	87	41	22 x 115 x 50	2,5	**2676113**
C835-M30-10T	10.000	160	216,0	62	31,5	25	78	106	45	26 x 140 x 65	7,1	**2676116**
C835-M36-16T	16.000	177	250,0	69	37,0	29	90	112	61	32 x 150 x 70	7,5	**2676119**

DSR-UP UNC lifting point



Features
– 360° rotatable.
– 180° pivoting.
– Bearing-mounted.
– Rotatable under load.
– UNC thread.

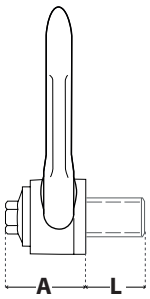

Type	WLL (kg)	A (mm)	L (mm)	Weight (kg)	Article number
DSR-UP UNC 1/4" 330lbs	150			0,3	**2674201**
DSR-UP UNC 5/16" 1000lbs	454			0,3	**2674203**
DSR-UP UNC 3/8" 1300lbs	590			0,9	**2674205**
DSR-UP UNC 1/2" 2400lbs	1.090			0,9	**2674207**
DSR-UP UNC 5/8" 3900lbs	1.773			2,6	**2674209**
DSR-UP UNC 3/4" 5250lbs	2.386			2,6	**2674211**
DSR-UP UNC 1/11" 11.200lbs	5.090			2,6	**2674215**

DSR DSS-UP lifting point



DSR

Features
- 360° rotatable.
- 180° pivoting.
- Bearing-mounted.
- Rotatable under load.
- Metric thread.

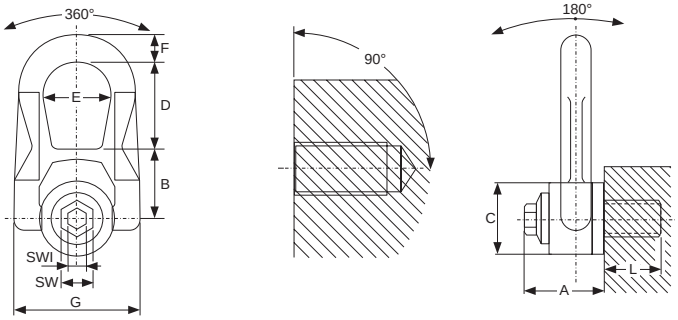



DSS

Features
- 360° rotatable.
- 180° pivoting.
- Bearing-mounted.
- Rotatable under load.
- Metric thread.

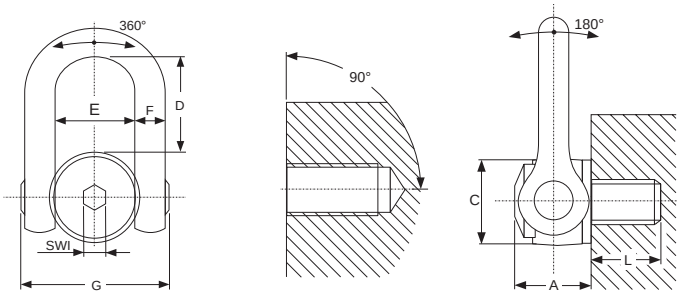

Type	WLL 5:1 (kg)	A (mm)	B (mm)	C (mm)	D (mm)	E (mm)	F (mm)	G (mm)	L (mm)	SWI (mm)	SW (mm)	Weight (kg)	Article number
DSR-UP M8/400KG	400	33	30	30	38	27	14	53	15	8	16	0,3	**2674108**
DSR-UP M10/700KG	700	33	30	30	38	27	14	53	18	8	16	0,3	**2674110**
DSR-UP M12/1.050KG	1.050	33	30	30	38	27	14	53	21	8	16	0,3	**2674112**
DSR-UP M14/1.400KG	1.400	45	40	45	53	38	17	76	23	8	20	0,9	**2674114**
DSR-UP M16/2.000KG	2.000	45	40	45	53	38	17	76	27	8	20	0,9	**2674116**
DSR-UP M18/2.300KG	2.300	45	40	45	53	38	17	76	27	8	20	0,9	**2674118**
DSR-UP M20/2.500KG	2.500	45	40	45	53	38	17	76	30	8	20	0,9	**2674120**
DSR-UP M22/3.500KG	3.500	62	55	60	83	55	25	115	33	14	24	2,6	**2674122**
DSR-UP M24/4.400KG	4.400	62	55	60	83	55	25	115	36	14	24	2,6	**2674124**
DSR-UP M30/6.300KG	6.300	62	55	60	83	55	25	115	45	14	24	2,7	**2674130**
DSR-UP M36/8.000KG	8.000	80	77	78	98	71	26	141	54	14	30	5,4	**2674136**
DSR-UP M42/8.500KG	8.500	80	77	78	98	71	26	141	63	14	30	5,5	**2674142**
DSS-UP M36/11.000KG	11.000	61	31	70	104	73	149	33	54	19	-	5,5	**2674236**
DSS-UP M42/13.000KG	13.000	61	31	70	104	73	149	33	68	19	-	11,0	**2674242**
DSS-UP M56/22.000KG	22.000	79	38	90	125	91	182	45	78	19	-	11,3	**2674256**
DSS-UP M64/25.000KG	25.000	79	38	95	125	91	182	45	90	19	-	12,2	**2674264**

DSR Quick lift lifting point



Quick-mount lifting point with double guidance for precise alignment and versatile lifting configurations.

Features

- Quick installation.
- Double guidance for alignment.
- Maintenance-free spring system.
- Operating temperature: -20°C to +200°C.

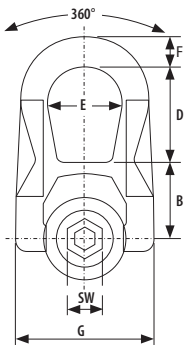

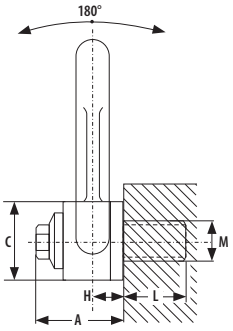

Type	WLL 5:1 (t)	A (mm)	B (mm)	C (mm)	D (mm)	E (mm)	F (mm)	G (mm)	H (mm)	L (mm)	M (mm)	SW (mm)	Weight (kg)	Article number
QL-DSR-M8	0,25	31	30	30	38	27	14	53	9,5	17,5	8	18	0,3	**2674508**
QL-DSR-M10	0,40	31	30	30	38	27	14	53	9,5	19,5	10	18	0,3	**2674510**
QL-DSR-M12	0,65	40	40	45	53	38	17	76	13,0	23,0	12	27	0,9	**2674512**
QL-DSR-M14	0,70	40	40	45	53	38	17	76	13,0	23,0	14	27	0,9	**2674514**
QL-DSR-M16	1,05	40	40	45	53	38	17	76	13,0	27,0	16	27	0,9	**2674516**
QL-DSR-M20	1,70	55	55	60	83	55	25	115	19,0	30,0	20	40	2,6	**2674520**

Stainless steel DSR Quick lift lifting point



Stainless steel quick-mount lifting point with double guidance for precise alignment and versatile lifting configurations.

Features

- Stainless steel construction.
- Quick installation.
- Double guidance for alignment.
- Maintenance-free spring system.
- Operating temperature: -20°C to +200°C.

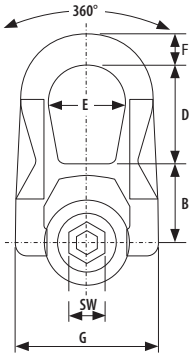

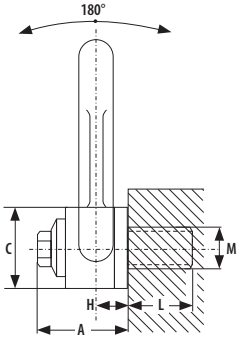

Type	WLL 5:1 (T)	A (mm)	B (mm)	C (mm)	D (mm)	E (mm)	F (mm)	G (mm)	H (mm)	L (mm)	M (mm)	SW (mm)	Weight (kg)	Article number
QL. RVS M8	0,25	32	31	30	38	27	14	53	9,5	17,5	8	18	0,3	**2674608**
QL. RVS M10	0,40	32	31	30	38	27	14	53	9,5	19,5	10	18	0,3	**2674610**
QL. RVS M12	0,65	32	40	45	53	38	17	76	13,0	23,0	12	27	0,9	**2674612**
QL. RVS M14	0,70	32	40	45	53	38	17	76	13,0	23,0	14	27	0,9	**2674614**
QL. RVS M16	1,05	32	40	45	53	38	17	76	13,0	27,0	16	27	0,9	**2674614**
QL. RVS M20	1,70	44	55	60	83	55	25	115	19,0	30,0	20	40	2,6	**2674620**

EOB eye bolt G8



Grade 8 high-alloy steel eye bolt. Must be tightened by hand only.
Safe working load under a maximum angle of 60°. Not to be side-loaded.

Features
– High-alloy steel.
– Hand-tightened only.
– Safe up to 60° angle.
– Not for lateral loads.

Type	WLL (kg)	A (mm)	B (mm)	C (mm)	D (mm)	M (mm)	Weight (kg)	Article number
EOB08	400	34	7	20	24	M8 x 1,25	0,05	**2675108**
EOB10	700	38	8	22	30	M10 x 1,50	0,08	**2675110**
EOB12	1.000	47	10	26	36	M12 x 1,75	0,14	**2675112**
EOB14	1.200	57	14	29	40	M14 x 2,00	0,25	**2675114**
EOB16	1.500	65	14	35	55	M16 x 2,00	0,36	**2675116**
EOB18	2.000	65	14	35	54	M18 x 2,00	0,38	**2675118**
EOB20	2.500	73	16	39	59	M20 x 2,50	0,55	**2675120**
EOB24	4.000	95	20	54	84	M24 x 3,00	1,12	**2675124**
EOB27	5.000	95	20	54	84	M27 x 3,00	1,18	**2675127**
EOB30	6.000	108	24	59	100	M30 x 3,50	1,84	**2675130**
EOB36	8.000	118	25	67	118	M36 x 4,00	2,44	**2675136**
EOB42	10.000	139	31	79	135	M42 x 4,50	3,97	**2675142**

DIN 580 eye bolt (G8)



Grade 8 high-alloy steel eye bolt according to DIN 580.
Must be tightened by hand only. Safe working load under a maximum angle of 60°. Not to be side-loaded.

Features
- According to DIN 580.
- High-alloy steel.
- Hand-tightened only.
- Safe up to 60° angle.
- Not for lateral loads.

Type	WLL (kg)	A (mm)	B (mm)	C (mm)	D (mm)	M (mm)	Weight (kg)	Article number
DIN580-G8-M8	400	34	7	20	13	M8 x 1,25	0,05	**2675308**
DIN580-G8-M10	700	38	8	22	17	M10 x 1,50	0,07	**2675310**
DIN580-G8-M12	1.000	47	10	26	21	M12 x 1,75	0,13	**2675312**
DIN580-G8-M16	1.500	64	14	35	27	M16 x 2,00	0,34	**2675316**
DIN580-G8-M20	2.500	73	16	39	30	M20 x 2,50	0,52	**2675320**
DIN580-G8-M24	4.000	95	20	54	36	M24 x 3,00	0,99	**2675324**

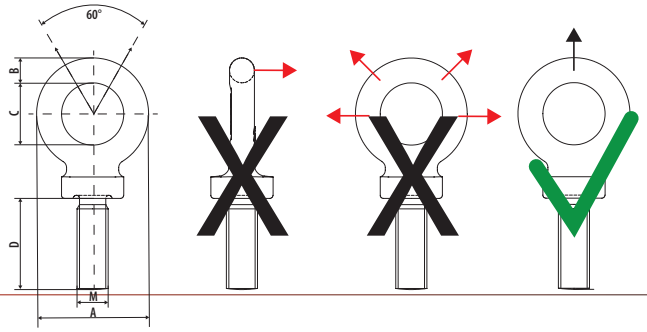

Permissible load directions
EOB eye bolt & DIN 580 eye bolt

AH weld-on hook (G8)



Grade 8 universal weld-on hook, suitable for trucks, trailers, excavators and lifting beams. Equipped with stable and strong safety latch..

Features

- Universal application.
- Equipped with safety latch.
- Weld-on design.

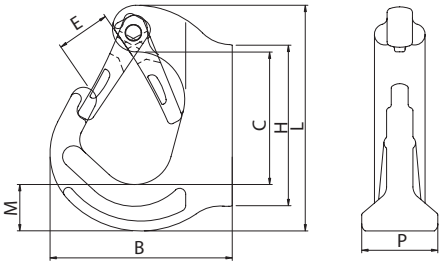

Type	WLL (kg)	B (mm)	C (mm)	E (mm)	H (mm)	L (mm)	M (mm)	P (mm)	Weight (kg)	Article number
AH-1.0	1.000	79	61	25	91	102	24	25,0	0,50	**2672501**
AH-3.0	3.000	105	75	29	116	128	30	36,0	1,20	**2672503**
AH-5.0	5.000	131	97	36	159	171	45	42,5	2,50	**2672505**
AH-8.0	8.000	136	94	36	159	177	44	51,0	3,30	**2672507**

C804 weld-on eye (G8)



Grade 8 weld-on lifting eye for machinery or vehicle structures. Loadable in tilting directions. Fitted with spring. Welding according to EN 25817, executed by certified welder according to EN 287-1.

Features

- Weld-on design.
- Loadable in tilting directions.
- With spring mechanism.
- Welding according to EN 25817.
- Executed by certified welder EN 287-1.

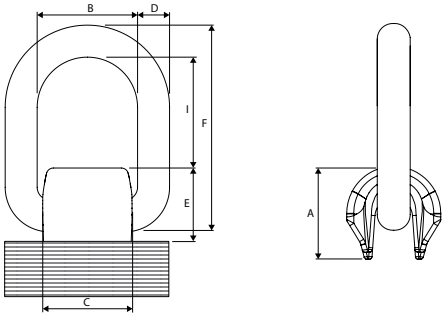







Type	WLL (kg)	A (mm)	B (mm)	C (mm)	D (mm)	E (mm)	F (mm)	I (mm)	Weight (kg)	Article number
C80401M-1.12	1.120	35	41	36	13	28	66	40	0,39	**2677101**
C80402M-2	2.000	38	42	39	13	33	74	44	0,51	**2677102**
C80403M-3.15	3.150	42	45	43	17	34	80	49	0,70	**2677103**
C80405M-5.3	5.300	60	55	50	22	44	95	55	1,50	**2677105**
C80408M-8	8.000	70	70	65	26	53	108	70	2,60	**2677108**
C80415M-15	15.000	90	97	90	34	73	155	92	5,85	**2677115**

C-15E galvanized eye bolt



Galvanized eye bolt, material C-15E. For straight-line loading only; lateral loading not permitted.

Features
- Galvanized.
- Material C-15E.
- Straight-line loading only.
- **No lateral loading.**

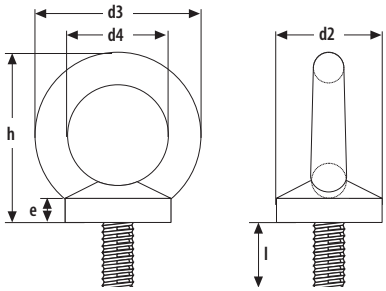

Type	WLL (kg)	D2 (mm)	D3 (mm)	D4 (mm)	E (mm)	H (mm)	L (mm)	M (mm)	Weight (kg)	Article number
DIN 580 C15E-M8	140	20	36	20	6	36	13,0	8	0,06	**3015101**
DIN 580 C15E-M10	230	25	45	25	8	45	17,0	10	0,11	**3015103**
DIN 580 C15E-M12	340	30	54	30	10	53	20,5	12	0,18	**3015105**
DIN 580 C15E-M14	490	35	63	35	12	60	27,0	14	0,28	**3015107**
DIN 580 C15E-M16	700	35	63	35	12	62	27,0	16	0,28	**3015109**
DIN 580 C15E-M20	1.200	40	72	40	14	71	30,0	20	0,43	**3015111**
DIN 580 C15E-M24	1.800	50	90	50	18	90	36,0	24	0,84	**3015113**
DIN 580 C15E-M27	2.100	50	90	50	18	90	36,0	27	1,22	**3015115**
DIN 580 C15E-M30	3.200	65	108	60	22	109	45,0	30	1,66	**3015117**
DIN 580 C15E-M36	4.600	75	196	70	26	128	54,0	36	2,65	**3015119**

C-15E galvanized eye nut



Galvanized eye bolt, material C-15E. For straight-line loading only; lateral loading not permitted.

Features
- Galvanized.
- Material C-15E.
- Straight-line loading only.
- **No lateral loading.**

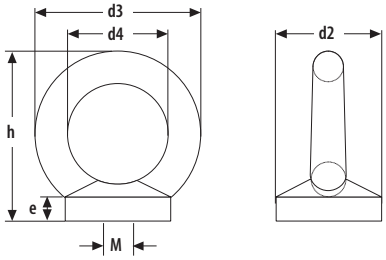

Type	WLL (kg)	D2 (mm)	D3 (mm)	D4 (mm)	E (mm)	H (mm)	M (mm)	Weight (kg)	Article number
DIN-582 C15E-M8	140	20	36	20	8,5	36	8	0,06	**3017101**
DIN-582 C15E-M10	230	25	45	25	10,0	45	10	0,10	**3017103**
DIN-582 C15E-M12	340	30	54	30	11,0	53	12	0,16	**3017105**
DIN-582 C15E-M14	490	35	63	35	13,0	62	14	0,24	**3017107**
DIN-582 C15E-M16	700	35	63	35	13,0	62	16	0,24	**3017109**
DIN-582 C15E-M20	1.200	40	72	40	16,0	71	20	0,36	**3017111**
DIN-582 C15E-M24	1.800	50	90	50	20,0	90	24	0,71	**3017113**
DIN-582 C15E-M27	2.100	50	90	50	20,0	90	27	1,10	**3017115**
DIN-582 C15E-M30	3.200	65	108	60	25,0	109	30	1,32	**3017117**
DIN-582 C15E-M36	4.600	75	126	70	30,0	128	36	2,08	**3017119**

G-4161 bow shackle with screw pin (G6)



Grade 6 galvanized steel bow shackle with screw pin. High tensile strength, suitable for temperatures from -20°C to +200°C. Safety factor 6.

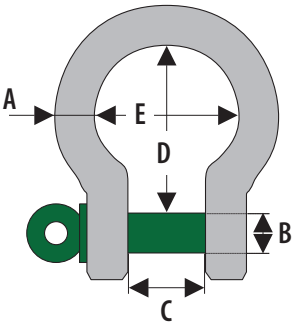

Type	WLL (kg)	A (mm)	B (mm)	C (mm)	D (mm)	E (mm)	Weight (kg)	Article number
G4161-1/4	500	7	8	12,0	29	20	0,06	**3011001**
G4161-5/16	750	9	10	13,5	32	21	0,11	**3011003**
G4161-3/8	1.000	10	11	16,1	36	26	0,15	**3011005**
G4161-7/16	1.500	11	13	18,0	43	29	0,21	**3011007**
G4161-1/2	2.000	13,5	16	22,0	51	32	0,37	**3011009**
G4161-5/8	3.250	16	19	27,0	64	43	0,65	**3011011**
G4161-3/4	4.750	19	22	31,0	76	51	1,06	**3011013**
G4161-7/8	6.500	22	25	36,0	83	58	1,56	**3011015**
G4161-1	8.500	25	28	43,0	95	68	2,32	**3011017**
G4161-1.1/8	9.500	28	32	47,0	108	75	3,28	**3011018**
G4161-1.1/4	12.000	32	35	51,0	115	83	4,51	**3011019**
G4161-1.3/8	13.500	35	38	57,0	133	92	5,93	**3011020**
G4161-1.1/2	17.000	38	42	60,0	146	99	7,89	**3011021**
G4161-1.3/4	25.000	45	50	74,0	178	126	13,40	**3011023**
G4161-2	35.000	50	57	83,0	197	138	18,15	**3011025**
G4161-2.1/4	42.500	57	65	95,0	222	160	26,29	**3011027**
G4161-2.1/2	55.000	65	70	105,0	260	180	37,60	**3011029**

G-4163 bow shackle nut-bolt-split pin (G6)



Grade 6 galvanized steel bow shackle with nut and split pin. High tensile strength, suitable for temperatures from -20°C to +200°C. Safety factor 6.

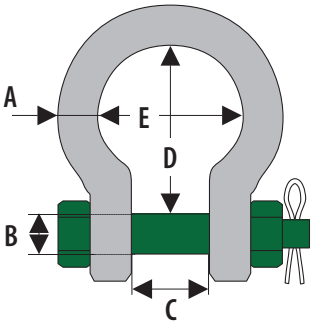

Type	WLL (kg)	A (mm)	B (mm)	C (mm)	D (mm)	E (mm)	Weight (kg)	Article number
G4163-1/4	500	7,0	8	12,0	29	20	0,06	**3012001**
G4163-5/16	750	9,0	10	13,5	32	21	0,11	**3012003**
G4163-3/8	1.000	10,0	11	16,1	36	26	0,16	**3012005**
G4163-7/16	1.500	11,0	13	18,0	43	29	0,22	**3012007**
G4163-1/2	2.000	13,5	16	22,0	51	32	0,42	**3012009**
G4163-5/8	3.250	16,0	19	27,0	64	43	0,74	**3012011**
G4163-3/4	4.750	19,0	22	31,0	76	51	1,18	**3012013**
G4163-7/8	6.500	22,0	25	36,0	83	58	1,77	**3012015**
G4163-1	8.500	25,0	28	43,0	95	68	2,58	**3012017**
G4163-1.1/8	9.500	28,0	32	47,0	108	75	3,66	**3012018**
G4163-1.1/4	12.000	32,0	35	51,0	115	83	4,91	**3012019**
G4163-1.3/8	13.500	35,0	38	57,0	133	92	6,54	**3012020**
G4163-1.1/2	17.000	38,0	42	60,0	146	99	8,19	**3012021**
G4163-1.3/4	25.000	45,0	50	74,0	178	126	14,22	**3012023**
G4163-2	35.000	50,0	57	83,0	197	138	19,85	**3012025**
G4163-2.1/4	42.500	57,0	65	95,0	222	160	28,33	**3012027**
G4163-2.1/2	55.000	65,0	70	105,0	260	180	39,60	**3012029**

G-4151 D-shackle with screw pin (G6)



Grade 6 galvanized steel D-shackle with screw pin. High tensile strength, suitable for temperatures from -20°C to +200°C. Safety factor 6.

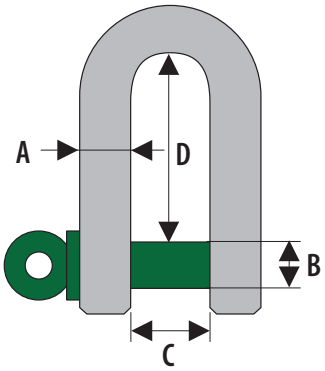

Type	WLL (kg)	A (mm)	B (mm)	C (mm)	D (mm)	Weight (kg)	Article number
G4151-1/4	500	7,0	8	12,0	25	0,06	**3013001**
G4151-5/16	750	9,0	10	13,5	27	0,11	**3013003**
G4151-3/8	1.000	10,0	11	16,1	31	0,16	**3013005**
G4151-7/16	1.500	11,0	13	18,0	37	0,21	**3013007**
G4151-1/2	2.000	13,5	16	22,0	43	0,37	**3013009**
G4151-5/8	3.250	16,0	19	27,0	51	0,65	**3013011**
G4151-3/4	4.750	19,0	22	31,0	59	1,06	**3013013**
G4151-7/8	6.500	22,0	25	36,0	73	1,56	**3013015**
G4151-1	8.500	25,0	28	43,0	85	2,32	**3013017**
G4151-1.1/8	9.500	28,0	32	47,0	90	3,28	**3013019**
G4151-1.1/4	12.000	32,0	35	51,0	94	4,51	**3013021**
G4151-1.3/8	13.500	35,0	38	57,0	115	5,93	**3013023**
G4151-1.1/2	17.000	38,0	42	60,0	127	7,89	**3013025**
G4151-1.3/4	25.000	45,0	50	74,0	149	13,40	**3013027**
G4151-2	35.000	50,0	57	83,0	171	16,86	**3013029**
G4151-2.1/4	42.500	57,0	65	95,0	190	24,56	**3013031**
G4151-2.1/2	55.000	65,0	70	105,0	203	32,65	**3013033**

D-shackle type G-4153 nut and bolt with split pin (G6)



Grade 6 galvanized steel D-shackle with nut and split pin. High tensile strength, suitable for temperatures from -20°C to +200°C. Safety factor 6.

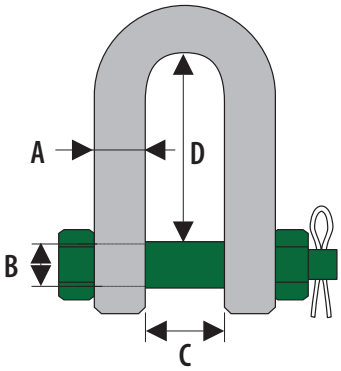

Type	WLL (kg)	A (mm)	B (mm)	C (mm)	D (mm)	Weight (kg)	Article number
G4153-1/2	2.000	13	16	22	43	0,37	**3014009**
G4153-5/8	3.250	16	19	27	51	0,65	**3014011**
G4153-3/4	4.750	19	22	31	59	1,06	**3014013**
G4153-7/8	6.500	22	25	36	73	1,56	**3014015**
G4153-1	8.500	25	28	43	85	2,32	**3014017**
G4153-1.1/8	9.500	28	32	47	90	3,28	**3014019**
G4153-1.1/4	12.000	32	35	51	94	4,51	**3014021**
G4153-1.3/8	13.500	35	38	57	115	5,93	**3014023**
G4153-1.1/2	17.000	38	42	60	127	7,89	**3014025**
G4153-1.3/4	25.000	45	50	74	149	13,40	**3014027**
G4153-2	35.000	50	57	83	171	16,86	**3014029**
G4153-2.1/4	42.500	57	65	95	190	24,56	**3014031**
G4153-2.1/2	55.000	65	70	105	203	32,65	**3014033**

Rema 14A type eye hook (G8)



Grade 8 alloy steel eye hook with safety factor 4. Supplied with safety latch.

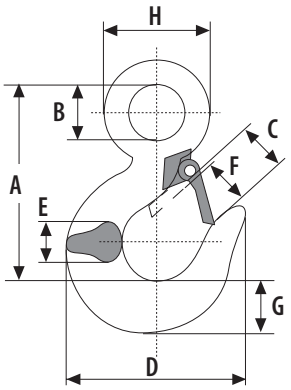

Type	WLL (kg)	A (mm)	B (mm)	C (mm)	D (mm)	E (mm)	F (mm)	G (mm)	H (mm)	Weight (kg/pc/m)	Article number
S6714A-1.25T	1.250	81	19	24	71	17	20	19	37	0,27	**3007001**
S6714A-1.6T	1.600	91	22	26	79	19	22	22	45	0,57	**3007003**
S6714A-2.5T	2.500	105	27	32	91	25	27	27	52	0,81	**3007005**
S6714A-3.2T	3.200	124	32	34	106	26	30	31	62	1,27	**3007007**
S6714A-5.4T	5.400	147	39	44	125	35	37	36	74	1,70	**3007009**
S6714A-8.2T	8.200	190	50	55	60	46	48	48	96	3,60	**3007011**
S6714A-12.8T	12.800	230	64	64	195	47	53	65	123	7,00	**3007013**
S6714A-16T	16.000	254	70	70	225	55	60	69	139	11,00	**3007015**
S6714A-22T	22.000	310	89	91	282	66	77	81	169	17,00	**3007017**

Rema 3A type swivel hook (G8)



Grade 8 alloy steel swivel hook with safety factor 4. Supplied with safety latch. Not rotatable under load.

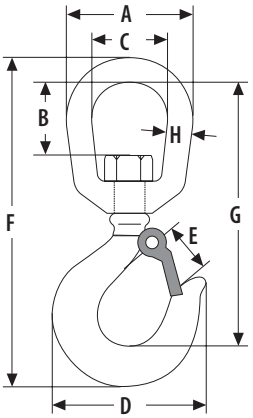

Type	WLL (kg)	A (mm)	B (mm)	C (mm)	D (mm)	E (mm)	F (mm)	G (mm)	H (mm)	Weight (kg/pc/m)	Article number
S6703A-1.25T	1.250	52	28	31	75	20	148	118	11	0,49	**3009001**
S6703A-1.6T	1.600	67	35	40	81	22	180	145	14	0,95	**3009003**
S6703A-2.5T	2.500	81	43	47	92	27	208	167	17	1,48	**3009005**
S6703A-3.2T	3.200	81	47	47	103	30	222	180	17	1,79	**3009007**
S6703A-5.4T	5.400	106	64	64	125	37	274	217	21	3,80	**3009009**
S6703A-8T	8.000	129	69	78	165	49	337	276	26	7,40	**3009011**
S6703A-11.5T	11.500	148	68	82	193	53	395	310	22	14,90	**3009013**
S6703A-16T	16.000	165	84	92	221	58	445	352	24	15,00	**3009015**
S6703A-22T	22.000	200	107	115	282	87	543	434	29	27,00	**3009016**

7



Lashing strap information	196
Anti-slip mats and corner protectors - information	197
Checklist correct and safe lashing	198
Lashing strap checklist	199
Lashing straps	200
Corner protectors and anti-slip mats	203
Power pullers	205
Lashing chains and chain tensioners	206

Information on Rema lashing straps

Rema web lashings are manufactured in accordance with European standard EN 12195-2. This standard uses LC in daN (Lashing Capacity).

The main requirements in EN 12195-2 are:

- The hardware – i.e. ratchet and hooks – must have a minimum safety factor of 2 × the LC value in straight pull.
- The webbing, before assembly, must have a minimum safety factor of 3 × the LC value in straight pull.
- The complete lashing system must have a minimum breaking strength of 2 × the LC value.

Explanation of the Rema lashing strap label

According to EN 12195-2, web lashings must be fitted with an instruction label. This label has to be attached both to the ratchet part (the webbing sewn to the ratchet) and to the loose end. For polyester web lashings the label must be blue.

The blue label attached to the lashing contains the following information:

1. LC1 = Lashing Capacity for straight pull.
2. LC2 = Lashing Capacity for top-over (looped) lashing.
3. SHF = Standard Hand Force (hand force).
4. STF = Standard Tension Force (pre-tension).
5. Webbing material (normally PES, polyester).
6. Webbing elongation in % (maximum permitted 7%).
7. Length (of the ratchet part or loose end; the example shows the ratchet part).
8. S/N = serial number of the specific lashing.
9. Warning text: "Not for lifting".
10. Name or logo of the manufacturer.
11. EN 12195-2: all Rema lashings are manufactured in accordance with this European standard.
12. Month and year of manufacture.

Option 1: Diagonal lashing

The LC value is decisive.

- The LC value is only relevant for diagonal lashings (direct lashings).
- With this method of securing, at least four lashing systems must be used (see fig. 2).
- The combination of the LC value with the vertical lashing angle α and the horizontal angle β determines the required lashing capacity.
- The vertical lashing angle α between the loading platform and the lashing system must be between 20° and 65° (see fig. 1).
- The horizontal lashing angle β between the lengthwise direction of the load and the lashing system must be between 6° and 55° (see fig. 2).

Option 2: Tie-down lashing

The STF value is critical.

- The most common securing method is tie-down lashing, where the load is pressed down onto the loading platform (see fig. 3).
- For this method it is essential to know with what force the lashing is tightened – in other words how much pre-tension can be built up in the lashing system.
- Here the LC (Lashing Capacity) is not the determining factor; what counts is the pre-tension in the system, indicated on the blue Rema label as STF in daN (Standard Tension Force).
- The STF value is measured at a standard SHF of 50 daN (Standard Hand Force).
- The STF value must be between 10% and 50% of the LC value of the lashing system (mainly determined by the quality and type of ratchet).
- For tie-down lashing at least two lashing systems must be used, and the angle α should be as large as possible (see fig. 3). Angle α must be between 35° and 90°.

Label niet in fotomap



Load securing and the coefficient of friction

The way in which the load is secured – diagonal lashing or tie-down lashing – determines whether the **LC (lashing capacity)** or the **STF (standard tension force)** is the relevant value.

The coefficient of friction between the load and the loading platform, together with the angles α and β, largely determines how many lashings are required (explained in detail in EN 12195-1).

Vertical lashing angle α

Fig. 1

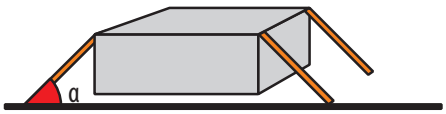

Horizontal lashing angle β

Fig. 2

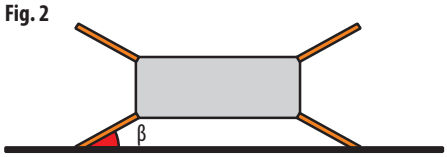

Vertical lashing angle α

Fig. 3

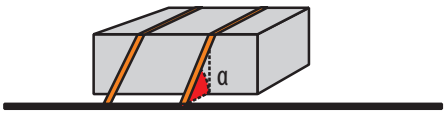

Increase the coefficient of friction with Rema anti-slip mats



Tie-down lashing using anti-slip mats (red) and corner protectors (blue).

Anti-slip mats (also called friction mats) are an essential element of professional load securing. They increase the friction between the load unit and the load carrier to such an extent that the load can no longer start to slide. Correct use of anti-slip mats, and therefore increasing the frictional resistance, immediately reduces **the number of lashing straps required**.

Rema anti-slip mats
- Tested in accordance with German guideline VDI 2700.
- Coefficient of friction μ > 0.6.



Indicative calculation for tie-down lashing with Rema lashing straps

A truck transports a load of 6,000 kg.
The centre of gravity is in the middle of the load. The load is secured by tie-down lashing with lashing straps at an angle α between 83° and 90° (see fig. 3). The term coefficient of friction refers to the friction between the load and the loading platform.

The highest forces occur during braking.
During braking, 80% of the weight of the load tends to move forwards; 50% of the weight tends to move to the right, left and rear.

Coefficients of friction
Metal on metal: μ = 0.2
Metal on wood: μ = 0.4
Rubber anti-slip mat: μ = 0.6

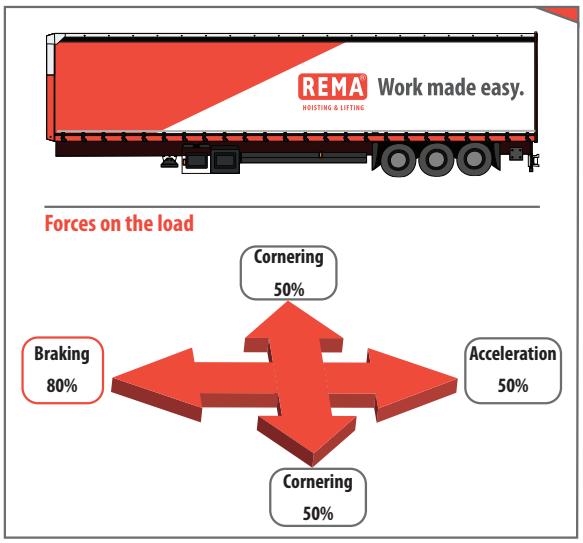

Example 1: steel on steel

80% of 6.000 kg	4800
0.2 (coefficient of friction) x 6.000 kg	1200
Total force to be absorbed	**3600 daN**

3,600 daN divided by the pre-tension (STF) of the lashing strap gives the required number of straps: **3600 / 320 = 11.25** therefore **12 lashing straps.**

Example 2: with anti-slip mats

80% of 6.000 kg	4800
0.6 (coefficient of friction) x 6.000 kg	3600
Total force to be absorbed	**1200 daN**

1,200 daN divided by the pre-tension (STF) of the lashing strap gives the required number of straps: **1200 / 320 = 3.75** therefore **4 lashing straps.**

Correct and safe lashing of the load

Securing cargo correctly is a skill; it is more than simply tightening a lashing strap around the load. Traditional ways of securing freight are often not sufficient to guarantee proper load securing.

Simply throwing a lashing strap over the load and tightening it is a very inefficient way of securing cargo. We can show you how to do it easier, better and faster.

CHECKLIST – correct and safe lashing of the load

When transporting loads on public roads, responsibility lies with the truck or trailer owner, the loader/shipper and the driver.

- Is the driver trained and competent for the task and in possession of the required documents and licences?
- Is the truck or trailer suitable for the load and approved for use on public roads (owner)?
- Is the loading platform clean and free from dirt, grease, oil, sand, ice, snow, etc.?
- Has the sequence, distribution and method of loading been correctly planned by the responsible person (shipper)?
  - Use of blocking devices, taking into account their maximum load capacity (timber beams, blocks, chocks, etc.).
  - Determination of the load's centre of gravity.
  - Avoid empty spaces between load units.
  - Check the stability of the load.
  - Lash the load in accordance with the EN standard.
  - The weight of the load is below the maximum payload of the truck and complies with the loading instructions specified by the vehicle or trailer manufacturer.
- Are the lashing devices attached to suitable lashing points/eyes?
- Do the lashing devices, including their labels, comply with the EN requirements (LC capacity, manufacturer, serial number, etc.)?
- Have the lashing devices been inspected at least once a year by an authorised person?
- Are the lashing devices protected against abrasion, wear and cutting, e.g. by using corner protectors?
- Are auxiliary load-securing devices available, such as dunnage or filler beams?
- Are the lashing devices and accessories free from damage?
- Are anti-slip mats available?
- Is the load secured in such a way that acceleration, braking and lateral forces can be absorbed?
- Is any load protruding beyond the vehicle properly marked in accordance with regulations?
- Has the driver checked that the load is secured in accordance with regulations – also after every stop?
- Use only lashing devices that comply with the relevant EN standards.

CHECKLIST – in accordance with European standard EN 12195-2

The inspected lashing strap must be withdrawn from service if not all items **(1 to 18)** can be ticked off.

- Any lashing strap taken out of service must be returned to the manufacturer for possible service/repair.
- If the lashing strap is not returned for service/repair, it must be destroyed so that it can no longer be used.
- Each lashing strap must be inspected at least annually by a competent person.

Label

1) Is the lashing strap and/or the loose end fitted with a label?
2) Is the label legible and does it contain the following information:

- LC – Lashing Capacity
- SHF 50 daN
- Text: for lashing only, not for lifting
- Name of manufacturer
- Standard (EN 12195-2)
- Elongation in % (at LC)
- Length in metres
- STF (ratchet part only)
- Webbing material
- Serial number / traceability code
- Year of manufacture

3) Does the label have the following colour: blue (PES, polyester)?

Label



Webbing

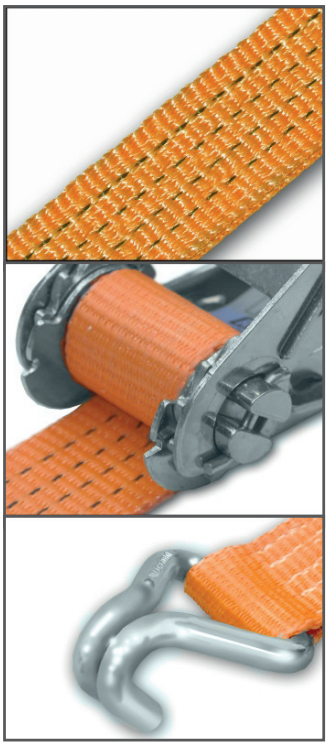

4) Are all seams free from damage?
5) Has the recommended maximum service life of 6 years not been exceeded (Rema recommendation)?
6) Is the webbing free from damage caused by heat or friction?
7) There are no cuts, broken yarns and/or protruding threads.
8) There is no damage caused by exposure to chemicals.
9) There are no signs of unauthorised repairs.

Ratchet

10) Is the ratchet marked with the LC value?
11) The tensioning element shows no visible deformation.
12) The handle moves freely and the locking plate is free from wear.
13) The tensioning element shows no corrosion and no cracks or fractures.

Hooks

14) Are the hooks marked with the LC value?
15) The hooks show no corrosion and no cracks or fractures.
16) Any deformation is less than 5%.
17) The hook shows no signs of twisting or bending caused by overloading and/or incorrect use.
18) On hooks fitted with safety latches, the latch must operate correctly and be undamaged.

Characteristics of Rema lashing straps

- In accordance with EN 12195-2.
- Robust, corrosion-resistant ratchet.
- Long handle for improved force transmission.
- Low elongation of the webbing reduces the need for re-tensioning.
- User instructions supplied (except for IG systems).

Important

- Never use lashing straps for lifting.
- Fit lashing straps so that the webbing is not twisted.
- Never load hooks on the tip.
- Do not tension the ratchet across a corner of the load.
- Always use protective equipment when securing loads with sharp edges and/or rough surfaces.
- Never use polyester lashing straps in an alkaline environment.
- Permitted working temperature range is –40° to +100°C.

Rema lashing strap hooks

1. **Claw hook**
2. **Triangle carabiner hook**
3. **Narrow wire hook**
4. **Twisted carabiner hook**
5. **Triangle**



Rema System 50 force cargo lashing STF 400 daN / LC 5000 daN



50 mm webbing with extended ratchet to achieve higher pre-tension for frictional lashing. Compliant with EN 12195-2.

Features

- Robust, corrosion-resistant ratchet.
- Handle length 265 mm.
- Low elongation webbing reduces re-tensioning.
- Not for lifting purposes.
- Supplied with Rema user manual.

Type	STF value (daN)	Lashing capacity LC (daN)	Lashing capacity LC, looped (daN)	Lashing capacity LC, endless (daN)	Webbing width (mm)	Length (m)	End fittings	Article number
50F/2-VR	400	2500	5000	-	50	9,0	Narrow wire hook 419	**1450015**

Rema System 50 standard cargo lashing STF 320 daN LC / 4000 daN



50 mm webbing with standard ratchet for everyday cargo securing. Compliant with EN 12195-2.

Features

- Robust, corrosion-resistant ratchet.
- Handle length 230 mm.
- Low elongation webbing reduces re-tensioning.
- Not for lifting purposes.
- Supplied with Rema user manual.

Type	STF value (daN)	Lashing capacity LC (daN)	Lashing capacity LC, looped (daN)	Lashing capacity LC, endless (daN)	Webbing width (mm)	Length (m)	End fittings	Article number
50/2-411-9m	320	2000	4000	-	50	9,0	Twisted carabiner hook 411	**1401005**
50/2-420-9m	320	2000	4000	-	50	9,0	Triangle 420	**1402005**
50/2-409-9m	320	2000	4000	-	50	9,0	Triangle carabiner hook 409	**1403005**
50/2-419-7m	320	2000	4000	-	50	7,0	Narrow wire hook 419	**1405003**
50/2-419-8m	320	2000	4000	-	50	8,0	Narrow wire hook 419	**1405004**
50/2-419-9m	320	2000	4000	-	50	9,0	Narrow wire hook 419	**1405005**
50/2-419-10m	320	2000	4000	-	50	10,0	Narrow wire hook 419	**1405007**
50/2-419-12m	320	2000	4000	-	50	12,0	Narrow wire hook 419	**1405009**
50/2-400U-9m	320	2000	4000	-	50	9,0	Claw hook 400U	**1407005**
50/1-6m	320	-	-	4000	50	6,0	Endless	**1408001**

Rema System 50 ergo cargo lashing STF 500 daN / LC 5000 daN



50 mm webbing with ERGO long-handle ratchet that is operated by a pulling motion which creates more leverage; the higher standard tension force STF of 500 daN means fewer lashings may be required. Compliant with EN 12195-2.

Features

- Robust, corrosion-resistant ratchet.
- Handle length 325 mm.
- Pull-down ERGO mechanism for higher STF.
- Low elongation webbing reduces re-tensioning.
- Not for lifting purposes.
- Supplied with Rema user manual.

Type	STF value (daN)	Lashing capacity LC (daN)	Lashing capacity LC , looped (daN)	Lashing capacity LC , endless (daN)	Webbing width (mm)	Length (m)	End fittings	Article number
50R/2-419-9m	500	2500	5000	-	50	9,0	Narrow wire hook 419	**1450001**

Rema System 35 cargo lashing STF 180 daN / LC 2000 daN



Compact 35 mm webbing set for lighter cargo securing. Compliant with EN 12195-2.

Features

- Robust, corrosion-resistant ratchet.
- Handle length 134 mm.
- Low elongation webbing reduces re-tensioning.
- Not for lifting purposes.
- Supplied with Rema user manual.

Type	STF value (daN)	Lashing capacity LC (daN)	Lashing capacity LC , looped (daN)	Lashing capacity LC , endless (daN)	Webbing width (mm)	Length (m)	End fittings	Article number
35/2-419-9m	180	1000	2000	-	35	9,0	Narrow wire hook 419	**1452001**
35/2-410-9m	180	1000	2000	-	35	9,0	Carabiner hook 410	**1452003**
35/1-6m	180	-	-	2000	35	6,0	Endless	**1452005**
35/2-419-7m	180	1000	2000	-	35	7,0	Narrow wire hook 419	**1452007**
35/2-419-6m	180	1000	2000	-	35	6,0	Narrow wire hook 419	**1452009**
35/1-12m	180	-	-	2000	35	12,0	Endless	**1452011**

Rema System 25B cargo lashing STF 135 daN / LC 1500 daN



25 mm webbing set for compact, light-duty applications. Compliant with EN 12195-2.

Features

- Robust, corrosion-resistant ratchet.
- Handle length 131 mm.
- Low elongation webbing reduces re-tensioning.
- Not for lifting purposes.
- Supplied with Rema user manual.

Type	STF value (daN)	Lashing capacity LC (daN)	Lashing capacity LC , looped (daN)	Lashing capacity LC , endless (daN)	Webbing width (mm)	Length (m)	End fittings	Article number
25B/2-402-7m	135	750	1500	-	25	7,0	Narrow wire hook 402	**1416001**
25B/2-402-5m	135	750	1500	-	25	5,0	Narrow wire hook 402	**1416003**
25B/2-402-3m	135	750	1500	-	25	3,0	Narrow wire hook 402	**1416005**
25B/1-6m	135	-	-	1500	25	6,0	Endless	**1416007**

Rema System 25A cargo lashing STF 120 daN / LC 800 daN



25 mm webbing set for light-duty securing where compact hardware is preferred. Compliant with EN 12195-2.

Features

- Robust, corrosion-resistant ratchet.
- Handle length 112 mm.
- Low elongation webbing reduces re-tensioning.
- Not for lifting purposes.
- Supplied with Rema user manual.

Type	STF value (daN)	Lashing capacity LC (daN)	Lashing capacity LC , looped (daN)	Lashing capacity LC , endless (daN)	Webbing width (mm)	Length (m)	End fittings	Article number
25A/2-402-7m	120	400	800	-	25	7,0	Narrow wire hook 402	**1416011**
25A/2-402-5m	120	400	800	-	25	5,0	Narrow wire hook 402	**1416013**
25A/2-402-3m	120	400	800	-	25	3,0	Narrow wire hook 402	**1416015**
25A/1-6m	120	-	-	800	25	6,0	Endless	**1416017**
25A/1-3m	120	-	-	800	25	3,0	Endless	**1416019**
25A/1-4m	120	-	-	800	25	4,0	Endless	**1416021**

Rema System IG cargo lashing LC 250 daN / SBIG cargo lashing LC 400 daN



25 mm webbing cam buckle lashings for light cargo securing. Available as System IG with LC 250 daN or System SBIG with LC 400 daN. Tension is applied with a cam buckle (not a ratchet). Compliant with EN 12195-2.

Features

- Cam buckle design for quick manual tensioning.
- Low elongation webbing reduces re-tensioning.
- Not for lifting purposes.

Type	Lashing capacity LC (daN)	Lashing capacity LC , looped (daN)	Lashing capacity LC , endless (daN)	Webbing width (mm)	Length (m)	End fittings	Article number
IG-001-0.5m	-	-	250	25	0,5	Endless	**1432050**
IG-002-1.0m	-	-	250	25	1,0	Endless	**1432100**
IG-003-1.5m	-	-	250	25	1,5	Endless	**1432130**
IG-001-2.5m	-	-	250	25	2,5	Endless	**1432001**
IG-002-3.5m	-	-	250	25	3,5	Endless	**1432002**
IG-003-4.5m	-	-	250	25	4,5	Endless	**1432003**
SBIG-103	-	-	400	25	3,0	Endless	**1433001**
SBIG-105	-	-	400	25	5,0	Endless	**1433002**
SBIG-107	-	-	400	25	7,0	Endless	**1433003**

Rema corner protectors



H3

Specially developed for protecting both the webbing and the load during lashing.

Features

- Suitable for 50 mm and 75 mm webbing.
- One-piece moulded design.
- Smooth webbing guidance.
- Reduces pressure points on the load.
- Tear-resistant and dimensionally stable, even at low temperatures.
- Reusable and shape-retaining.
- Manufactured from high-quality plastic.



H1

Type	Dimensions (mm)	Webbing width (mm)	Article number
H3 (white)	100 x 100	50	**1460083**
H1 (black)	150 x 190	50	**1460085**

Rema KP Connect 400 heavy-duty corner protector



Heavy-duty corner protectors, extendable by simply connecting them together.

Features

- Protects both the load and the webbing.
- Distributes pressure evenly across the load.
- Keeps unit loads together.
- Holds partial loads in place.

Type	Internal depth (mm)	Length (mm)	Article number
KP Connect 400	175	Clicked: 375 / Not clicked: 410	**1460098**

Rema DF polyurethane protection plate

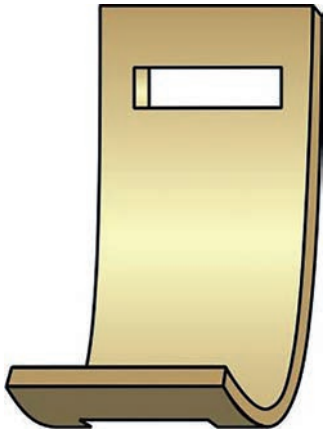

Polyurethane protection plate for safe and trouble-free lifting. Protects slings, round slings and lashings, especially when handling products with rough surfaces and sharp edges.

Features

- Suitable for use with webbing slings, round slings and lashing straps.
- Provides protection against sharp edges and abrasive surfaces.
- High wear resistance.



Type	For lashing straps (width in mm)	Internal dimensions A x B (mm)	External dimensions L x H (mm)	Article number
DF-25	25	25x10	250x80	**1105025**
DF-35	30	35x10	250x80	**1105035**
DF-55	50	55x10	300x100	**1105055**
DF-80	75	80x30	450x120	**1105080**

Rema anti-slip mat



Anti-slip mats increase friction between load and platform or between loads, reducing the risk of sliding during transport. Tested according to VDI 2700.

Features

- Friction coefficient >0.6.
- Available in various thicknesses and sizes.

Application

- AS-0.25: Between load floor and cargo, or between layers of cargo.
- AS-2.4: Cost-efficient mat, typically used across truck loading floors.
- AS-5: General-purpose mat, for use between cargo and load floor.
- AS-13.6: Thin 3 mm mat, easy to cut to size, ideal for use between cargo layers.

Type	Length (mm)	Dimensions (mm)	Article number
AS-0.25	250	250 x 8	**1460101**
AS-2.4	2.400	250 x 6	**1460106**
AS-5.0	5.000	250 x 8	**1460105**
AS-13.6	13.600	150 x 3	**1460108**

MD power puller



Lightweight yet extremely robust pulling and tensioning tool. Ideal for on-site use with a wide range of applications for pulling, tensioning and securing loads.

Features
- Safety factor 4
- Hooks fitted with safety latches
- Anti-slip safety grip
- Safe working load applies to horizontal use only

Not suitable for lifting purposes.

Optional accessories
- Wire tensioning chain (0310012)
- Barbed wire tensioner (0310014)

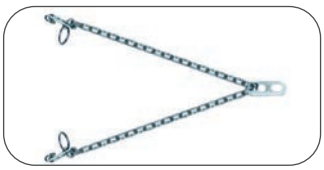

Wire tensioning chain



Barbed wire tensioner

Type	WLL (kg)	Tension range (m)	Cable diameter (mm)	Weight (kg)	Article number
MD-144 S	450	3.66	4.76	3.6	**0310001**
MD-144 SB	750	1.83	4.76	4.1	**0310003**

MDWS band puller



Lightweight and robust pulling and tensioning tool equipped with a flexible webbing band. The band prevents damage to the load and provides controlled tensioning.

Features
- Safety factor 4
- Hooks equipped with safety latches
- Anti-slip safety grip
- Non-conductive properties
- Safe working load only in horizontal use

Not suitable for lifting purposes.

Type	WLL (kg)	Tension range (m)	Webbing width (mm)	Webbing Length (m)	Weight (kg)	Article number
MDWS-1	225	3.5	25	3.66	3.3	**0310005**
MDWS-2	450	1.73	25	3.66	3.8	**0310007**
MDWS-25	225	3.05	25	7.62	3.5	**0310009**

MD Power Puller



Lightweight yet extremely robust pulling and tensioning tool designed for use with rope. Suitable for pulling, securing and tensioning applications where rope is preferred.

Features
- Safety factor 4
- Hooks fitted with safety latches
- Anti-slip safety grip
- Non-conductive properties
- Safe working load only in horizontal use

Not suitable for lifting purposes.

Important

Always inspect the steel cable, webbing band or rope for damage before use.

Check that the hook is not bent and that the safety latch is functioning correctly.

Never extend the lever arm to apply additional force.

Type	WLL (kg)	Rope diameter (mm)	Weight (kg)	Article number
MDA-0	350	12.7	3.2	**0310005**

Rema SK1 lashing chain (G10) with chain tensioner (G8)



Lashing chain set for securing heavy loads in road, rail, air and sea transport. Supplied with ratchet tensioner, safety latch hooks, and shortening claw with safety pin to prevent unintentional loosening during transport. Manufactured with Grade 10 chain and components and Grade 8 tensioner.

Features

- Ratchet tensioner with anti-release lock.
- Long leg adjustable via shortening claw with safety catch.
- Safety label with WLL and STF.
- Chains and components Grade 10, tensioner Grade 8.
- Standard length 3.5 m.
- Handle length 355 mm.

Type	STF value (daN)	Lashing capacity LC (daN)	Min. breaking force (daN)	Chain diameter (mm)	Handle length (mm)	Length (m)	Weight (kg)	Article number
Lashing chain 8mm	1900	5000	10000	8	355	3,5	12,0	**3025108**
Lashing chain 10mm	1900	8000	16000	10	355	3,5	19,0	**3025110**
Lashing chain 13mm	2500	13400	26800	13	355	3,5	33,0	**3025113**

Rema SK2 lashing chain (G8) with chain tensioner (G8)



High-quality Grade 8 lashing chain with hooks on both ends, complete with chain tensioner. Supplied with shortening hooks including safety pin for secure adjustment.

Features

- Grade 8 quality.
- Equipped with chain tensioner and safety hooks.
- Includes shortening hooks with safety pin.
- Standard length 3.5 m.

Options

- Other lengths available on request.

Type	Lashing capacity LC (daN)	Min. breaking force (daN)	Chain diameter (mm)	Length (m)	Weight (kg)	Article number
SK-2 8-RCH-RCH 3500	4000	8000	8	3,5	11,2	**3025208-3.5**
SK-2 10-RCH-RCH 3500	6300	12600	10	3,5	16,0	**3025210-3.5**
SK-2 13-RCH-RCH 3500	10000	20000	13	3,5	25,5	**3025213-3.5**

Rema TLB-R chain tensioner (G8)

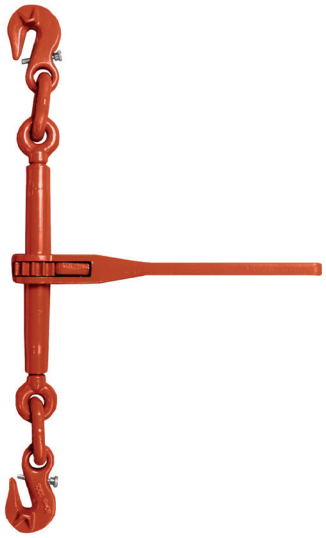

Grade 8 ratchet-type chain tensioner for reliable securing of loads with lashing chains.

Features

- Ratchet mechanism.
- Shortening hooks with safety catch.
- Fitted with anti-release lock.
- Forged design.
- Smooth operation.
- Not suitable for lifting purposes.

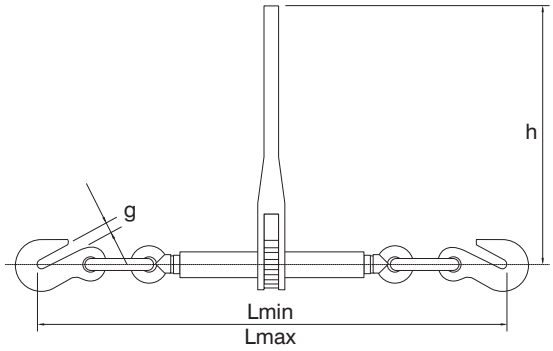

Type	STF value (daN)	Lashing capacity LC (daN)	Min. breaking force (daN)	Chain diameter (mm)	G (mm)	H (mm)	L min (mm)	L max (mm)	Span width (mm)	Weight (kg)	Article number
TLB- 7R 8	1900	4000	8000	8	12,7	355	595	780	185	4,9	**3023010**
TLB- 8R 10	1900	6300	12600	10	14,0	355	620	790	170	5,5	**3023013**
TLB-10R 13	2500	10000	20000	13	16,5	355	685	885	200	7,4	**3023016**
TLB-13R 16	2500	16000	32000	16	23,5	381	825	1055	230	12,5	**3023017**

8



Material lifts	210
Spring balancers	214
Steel jacks	217
Sluice winding jacks	219
All jack	219
Hydraulic jacks	220
Hydraulic machine jacks	222
Workshop cranes	224
Drum handling	226
Transport skates	230
Mobile manual lifting tables	233
Stationairy electric lifting tables	234
Forklift accessories	238

Rema BD2 materials lift



Compact and reliable manual material lift with a maximum load capacity of 180 kg and lifting height of 3.98 m. Suitable for versatile handling and positioning tasks in industrial applications.

Features
- Aluminium mast with plastic rollers.
- Hand winch with automatic load brake.
- Foldable legs for easy transport.
- Lockable mast.
- Wheel diameter: front 250 mm, rear 76 mm.
- Supplied with forks as standard.

Application
- Industrial material handling and positioning tasks.

Options
- Hook platform.
- Tube platform.



Reversible fork carriage

Option



Hook platform

Option



Tube platform

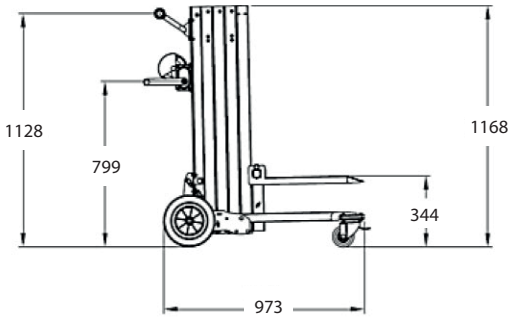

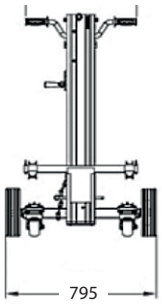

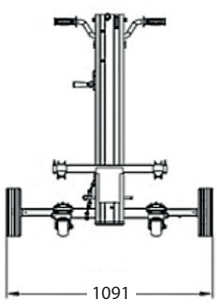

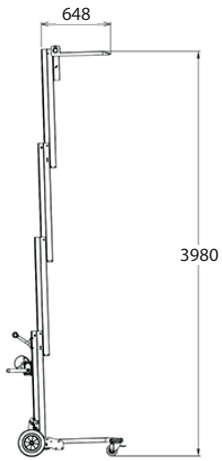

Type	WLL (kg)	Size (cm)	Lifting height (m)	Article number
BD2-3m	180	920 x 780 x 117	3,98	**3493001**
Option: Hook platform	180	374	-	**3493003**
Option: Tube platform	180	389	-	**3493005**

Rema AL 330 assembly lift



Mobile and compact assembly lift for lifting and positioning loads up to working height.

Features
- Steel mast.
- Hand winch with automatic load brake.
- Winch equipped with 5 mm steel cable.
- Own weight platform AL 330: 5.8 kg.
- Optional aluminium lifting platform weight: 4.8 kg.
- Four foldable legs with braked swivel wheels Ø 100 mm.

Application
- Industrial environments where loads or products need to be brought to mounting height.

Options
- Aluminium foldable platform 750 × 435 mm.

Option: aluminium platform



Carrying platform (standard)



Unfolded



Folded



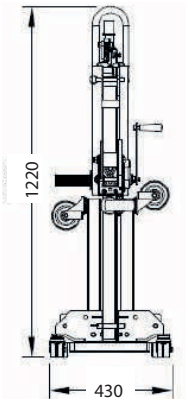

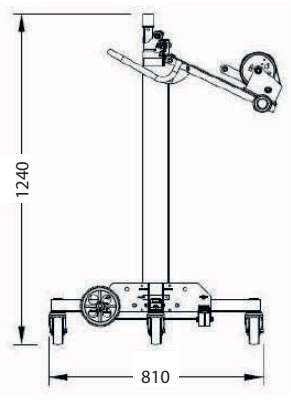

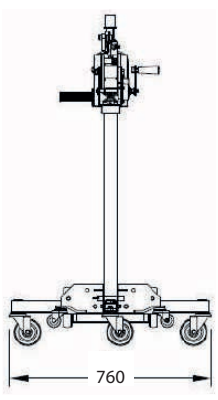

Type	WLL (kg)	Lifting height (m)	Platform dimensions (mm)	Weight (kg)	Article number
AL330-110	110	3,3	770 x 460	47,0	**3491001**
Options: Aluminium platform	-	-	750 x 435	4,8	**3491003**

Rema DWM 380 panel lift



The Rema DWM is a versatile hand-operated panel lift with 70 kg load capacity. Designed for accurate positioning of construction boards and panels such as plasterboards and insulation panels. Compact cradle/platform (950 × 1000 mm).

Features

- Dual safety system: automatic load brake on winch + manual mast lock.
- Telescopic mast for precise positioning.
- Tilting and swivelling platform.
- Winch equipped with 4 mm steel cable.
- Four foldable legs with braked swivel wheels Ø 125 mm.

Application

- For precise positioning of boards and panels such as plasterboards and insulation panels.

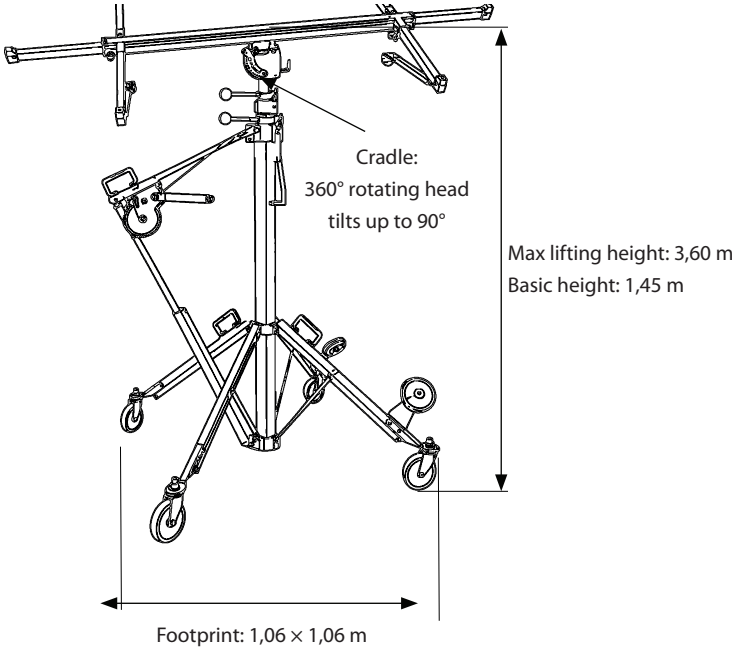

Type	WLL (kg)	Lifting height max (m)	Basic height min (m)	Footprint (m)	Max cradle span (cm)	Platform dimensions (mm)	Weight (kg)	Article number
DWM380	70	3,60	1,45	1,06 × 1,06	270	950 x 1000	39,0	**3494001**

Rema ML2 stacker



The Rema ML2 is a lightweight and durable aluminium stacker with removable holders for forks or platform. Compact, foldable and easy to transport. Supplied with forks as standard.

Features

- Aluminium construction: strong, durable, lightweight.
- Multifunctional: removable holders for platform or forks.
- Foldable design.
- Easy transport in vans, with rubber wheels.
- Solid wheels Ø 250 mm / 10".
- Equipped with 4 mm steel cable.

Application

- Ideal for lifting materials on sites where mobility and flexibility are required.



Forks (standard)

Option



Platform

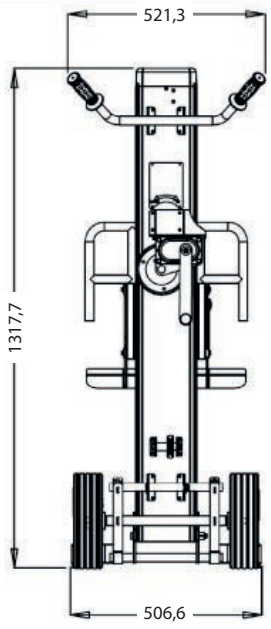

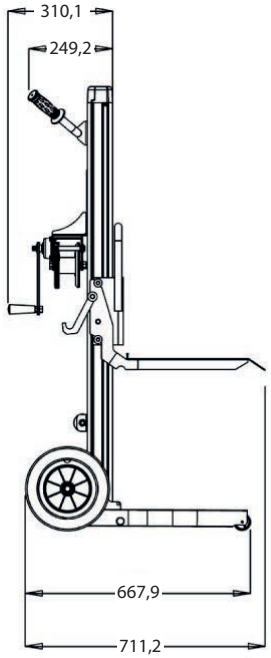

Type	WLL (kg)	Lifting height (m)	Min. height (mm)	Max. height (mm)	Weight (kg)	Article number
ML2 with forks	150	1,1	100	1057	25,0	**3492001**
Option: Platform	120	1,0	65	1026	24,0	**3491004**

Rema low-duty spring balancer



With Rema spring balancers, electric and pneumatic tools can be operated weightlessly and kept at the correct working height. Designed according to DIN 15112.

Compact for light tools
For small pneumatic and electric tools where low weight and easy handling matter most

Features

- Aluminium body.
- Specially designed spiral spring ensures smooth, quiet operation.
- Adjustable load capacity.
- Supplied with carabiner hook.
- Extra eye for fall arrest by wire rope.
- Flexible stainless steel cable.
- Wear-resistant cable guide.
- Adjustable cable length.
- Insulated suspension system.
- Single-point fixation.

Application

- Small pneumatic and electric drills, screwdrivers, measuring instruments etc.

Options

- ATEX version available..

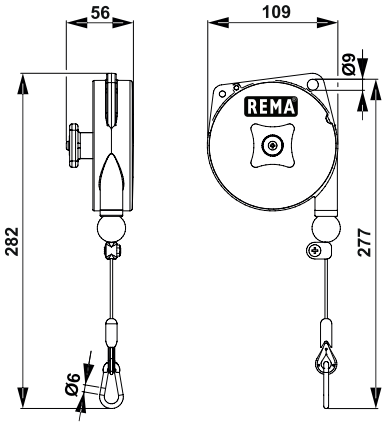

Type	WLL (kg)	Cable length (m)	Weight (kg)	Article number
9311	0.4-1.0	1,6	0,6	**0629311**
9312	1.0-2.0	1,6	0,6	**0629312**
9313	2.0-3.0	1,6	0,7	**0629313**

Rema medium-duty spring balancer



With Rema spring balancers, electric and pneumatic tools can be operated weightlessly and kept at the correct working height. Designed according to DIN 15112.

Lever-adjustable capacity
Quick capacity setting by lever for a wide range of workshop tools.

Features

- Aluminium body.
- Spiral spring ensures smooth, quiet operation.
- Adjustable load capacity.
- Supplied with carabiner hook.
- Extra eye for fall arrest by wire rope.
- Flexible stainless steel cable.
- Wear-resistant cable guide.
- Adjustable cable length.
- Insulated suspension system.
- Capacity adjustable by lever.
- Spring break protection (except type 9320).
- Type 9320–9340: single-point fixation.
- Type 9346–9350: multiple-point fixation possible.

Application

- Grinders, staplers, drills etc.

Options

- ATEX version available.

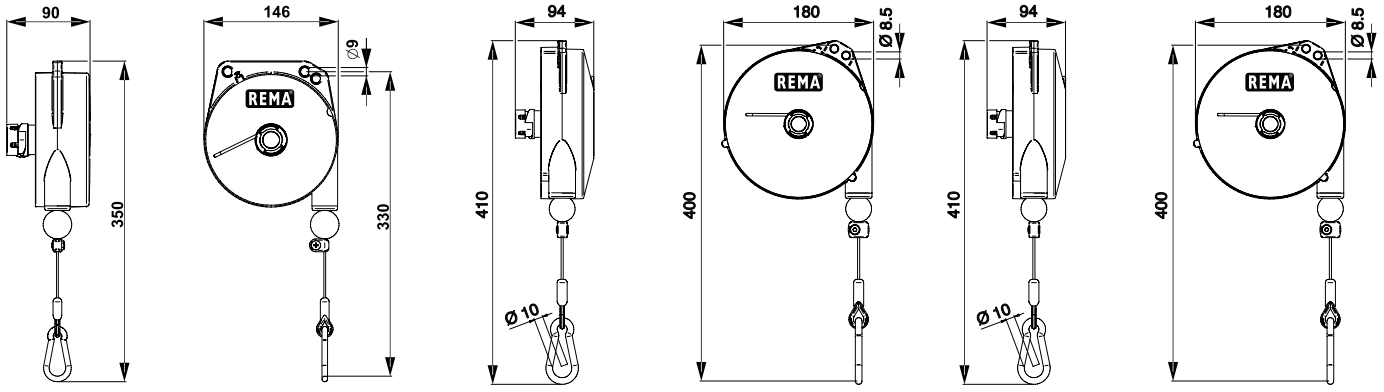

9320 - 9323 | 9336 - 9340 | 9346 - 9350

Type	WLL (kg)	Cable length (m)	Weight (kg)	Article number
9320	1.0- 2.5	2,0	2,0	**0629320**
9321	2.0- 4.0	2,0	2,0	**0629321**
9322	4.0- 6.0	2,0	2,3	**0629322**
9323	6.0- 8.0	2,0	2,5	**0629323**
9336	2.0- 4.0	2,5	2,9	**0629336**
9337	4.0- 6.0	2,5	3,2	**0629337**
9338	6.0- 8.0	2,5	3,5	**0629338**
9339	8.0-10.0	2,5	3,7	**0629339**
9340	10.0-14.0	2,5	4,0	**0629340**
9346*	2.0- 4.0	2,5	3,0	**0629346**
9347*	4.0- 6.0	2,5	3,3	**0629347**
9348*	6.0- 8.0	2,5	3,6	**0629348**
9349*	8.0-10.0	2,5	3,8	**0629349**
9350*	10.0-14.0	2,5	4,1	**0629350**

Rema heavy-duty spring balancer



With Rema spring balancers, electric and pneumatic tools can be operated weightlessly and kept at the correct working height. Designed according to DIN 15112.

Locking device
Locks the tool at any position after installation to keep a fixed working height

Features

- Aluminium body.
- Spiral spring ensures smooth, quiet operation.
- Adjustable load capacity (knob).
- Supplied with carabiner hook.
- Extra safety eye for safety chain.
- Flexible stainless steel cable.
- Wear-resistant cable guide.
- Adjustable cable length.
- Insulated suspension system.
- Conical drum with bearings for constant tension.
- Adjustable capacity.
- Cable length can be fixed at multiple positions by remote control.
- Rotating top hook with safety latch.
- Spring break safety (>3 kg).

Application

- Heavy electric and pneumatic tools, measuring instruments etc.

Options

- Several spring balancers are available in ATEX versions: Ex II 2 GDc II T 85° (T6).

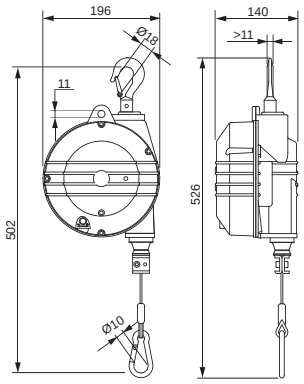

9354 - 9359

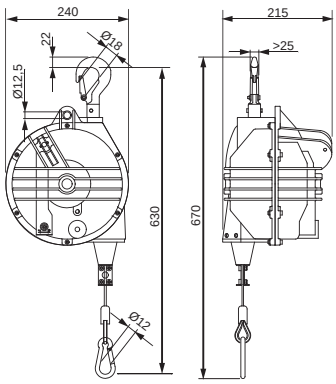

9361 - 9370

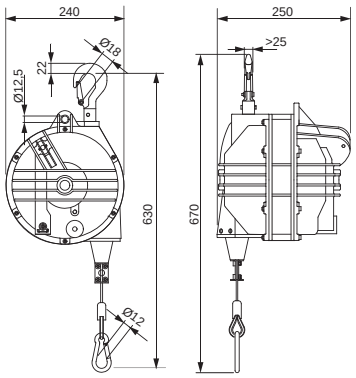

9371

Type	WLL (kg)	Cable length (m)	Weight (kg)	Article number
9354	4.0-7.0	2,0	5,0	**0629354**
9355	7.0-10.0	2,0	5,5	**0629355**
9356	10.0-14.0	2,0	5,5	**0629356**
9357	14.0- 18.0	2,0	6,5	**0629357**
9358	18.0- 22.0	2,0	6,0	**0629358**
9359	22.0- 25.0	2,0	6,6	**0629359**
9361*	10.0-15.0	2,0	10,3	**0629361**
9362*	15.0- 20.0	2,0	10,6	**0629362**
9363*	20.0- 25.0	2,0	11,2	**0629363**
9364*	25.0- 30.0	2,0	11,5	**0629364**
9365*	30.0- 35.0	2,0	11,8	**0629365**
9366*	35.0- 45.0	2,0	12,4	**0629366**
9367*	45.0- 55.0	2,0	12,5	**0629367**
9368*	55.0- 65.0	2,0	13,6	**0629368**
9369*	65.0- 75.0	2,0	14,5	**0629369**
9370*	75.0- 90.0	2,0	17,3	**0629370**
9371*	90.0-105.0	2,0	18,0	**0629371**

Rema DMK / DMKR steel jacks



DMK
(standard safety crank)

Rated for full capacity on head or toe

Mechanical steel jacks for lifting on the head or on the toe, with low operating effort thanks to the optimal transmission ratios.

DMK is the standard version with safety crank.
DMKR is the version with ratchet crank.

Features

- Robust construction with large, stable base plate.
- Safety crank with foldable handle (DMK).
- Ratchet crank version available (DMKR).
- Models from 1.5 t to 10 t, typical lifting height 0.30–0.35 m.
- Conform to EN 12100, EN 13157, DIN EN 7355.

Options

- DMKR variant with ratchet crank.



DMKR
(optional ratchet crank)

Type	WLL (kg)	Overall height (mm)	Lifting height (mm)	Toe height lowest position (mm)	Weight (kg)	Article number
DMK-1.5	1.500	725	350	70	14,0	**1950015**
DMK-3.0	3.000	725	350	75	22,0	**1950030**
DMK-5.0	5.000	725	300	75	30,0	**1950050**
DMK-10.0	10.000	800	300	85	47,0	**1950100**
DMKR-1.5	1.500	725	350	70	15,0	**1950016**
DMKR-3.0	3.000	725	350	75	23,0	**1950031**
DMKR-5.0	5.000	725	300	70	29,0	**1950051**

Rema VHS/ KBH steel jacks



Rated for full capacity on head or toe

Robust jacks with a large, stable base plate - ideal for lifting heavy machinery. VHS is the standard height model; KBH is the short model for limited installation space.

Both available as R-versions with ratchet crank (VHS-R, KBH-R).

Features

- Safety crank with foldable handle (standard).
- VHS standard model; KBH short model.
- R-versions with ratchet crank.
- Head and toe lifting (with toe/claw height listed per model).
- Capacities 1.5 t to 10 t; lifting height typically 0.30–0.35 m.
- Conform to EN 12100, EN 13157, DIN EN 7355.

Options

- Ratchet crank versions **VHS-R** and **KBH-R**.

Type	WLL (kg)	Overall height (mm)	Lifting height (mm)	Toe height lowest position (mm)	Weight (kg)	Article number
VHS-1.5	1.500	725	350	70	12,0	**1901031**
VHS-3.0	3.000	725	350	75	20,0	**1901033**
VHS-5.0	5.000	725	300	70	25,0	**1901035**
VHS-10.0	10.000	800	300	90	40,0	**1901040**
VHS-R-1.5	1.500	725	350	70	12,0	**1901131**
VHS-R-3.0	3.000	725	350	75	20,0	**1901133**
VHS-R-5.0	5.000	725	300	70	25,0	**1901135**
VHS-R-10.0	10.000	800	300	90	40,0	**1901140**
KBH-1.5	1.500	570	300	70	11,0	**1902031**
KBH-3.0	3.000	570	300	75	18,0	**1902033**
KBH-5.0	5.000	600	300	70	22,0	**1902035**
KBH-10.0	10.000	650	300	80	38,0	**1902040**
KBH-R-1.5	1.500	570	300	70	11,0	**1902131**
KBH-R-3.0	3.000	570	300	75	18,0	**1902133**
KBH-R-5.0	5.000	600	300	70	22,0	**1902135**
KBH-R-10.0	10.000	650	300	80	38,0	**1902140**

Other steel jacks – specials on request

Custom mechanical jacks tailored to specific applications. Examples include adjustable jacks, ratchet jacks, cable drum jacks, rail jacks, timber log jacks and pole jacks.

Features

- Application-specific design and dimensions.
- Options for head/toe configuration and base plates.
- Built to relevant standards depending on design.



Adjustable mechanical jack



Ratchet jack



Cable drum jack



Rail jack



Timber log jack



Pole jack

Rema 311 and 312 sluice winding jacks



Mechanical sluice jacks designed for reliable vertical lifting in sluice gates and similar applications. Available in two versions: type 311 with back plate and type 312 with foot plate.

Features
- Type 311 supplied with back plate.
- Type 312 supplied with foot plate.
- Safety crank with foldable handle.
- Robust steel construction for heavy-duty use.
- Designed for long service life with minimal maintenance.

Options
- Extended rack bar (longer toothed rack).

Type	WLL (kg)	Overall height (mm)	Lifting height (mm)	Hole size heart on heart (mm)	Weight (kg)	Article number
311-1.5	1.500	1150	800	130x160	14,0	**2218001**
311-3.0	3.000	1260	800	165x220	24,0	**2218003**
311-5.0	5.000	1280	800	180x250	32,0	**2218005**
312-1,5	1.500	1150	800	130x 70	14,0	**2219001**
312-3.0	3.000	1260	800	130X 80	24,0	**2219003**
312-5.0	5.000	1280	800	200x100	32,0	**2219005**

Rema All jack



Heavy-duty farm jack designed according to ASME/ANSI safety standard. Suitable for lifting, clamping, and pushing applications in workshops, agriculture, and off-road use.

Features
- Patented overload protection prevents misuse; the safety link blocks further lifting while holding the load.
- Long service life thanks to cast components and simple operation.
- Extra-large base plate for maximum stability.

IMPORTANT:
- Lifting height 300 mm – Capacity 3,000 kg.
- Lifting height 600 mm – Capacity 2,250 kg.
- Lifting height 900 mm – Capacity 1,600 kg.
- Lifting height 1200 mm – Capacity 1,000 kg.

Type	WLL (kg)	Overall height (mm)	Max. height (mm)	Weight (kg)	Article number
REMA-ALL	3.000	1215	1200	14,0	**0310050**

Weber A / AT hydraulic jacks



High-quality hydraulic jacks for universal lifting applications. Type A is equipped with a screw spindle for easy adjustment of minimum height. Type AT is fitted with two pistons, providing an extended lifting height. Designed and manufactured according to DIN 76024 and VBG 8.

Features

- Screw spindle on type A for adjustable minimum height.
- Dual-piston system on type AT for greater lifting height.
- Overload protection via pressure relief valve.
- Carrying handle supplied for models ≥10 kg own weight.
- Convex base reduces lateral pressure.
- Operating temperature: –20 °C to +70 °C.
- Suitable for horizontal use up to type A-30 (pump unit positioned at the bottom).
- Not designed for long-term load holding.

Application

- General industrial lifting tasks.
- Machine installation and maintenance.
- Suitable for horizontal applications (up to A-30).

Options

- Carrying handle (standard ≥10 kg).

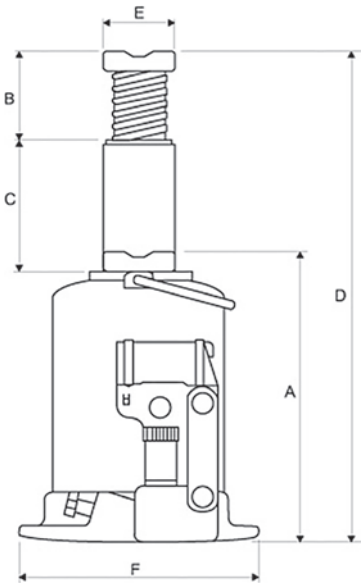

Type	WLL (kg)	A (mm)	B (mm)	C (mm)	D (mm)	E (mm)	F (mm)	Weight (kg)	Article number
A2-170	2.000	170	92	115	377	28	103 x 105	2,9	**2705001**
A3.5-170	3.500	170	92	115	377	28	103 x 105	2,9	**2705003**
A5-212	5.000	212	100	150	462	40	110 x 110	3,9	**2705005**
AX8-220*	8.000	220	110	150	480	50	124 x 122	5,7	**2705007**
A10-220*	10.000	220	110	150	480	50	124 x 122	5,7	**2705009**
A12-230*	12.000	230	110	157	497	50	134 x 120	7,1	**2705011**
AX15-230*	15.000	230	110	155	495	60	139,5 x 130	8,3	**2705013**
AX20-240*	20.000	240	110	155	505	60	164 x 160	10,7	**2705015**
AH25-240*	25.000	240	118	157	515	65	185 x 176	13,1	**2705017**
A30-240*	30.000	240	100	142	482	65	185 x 176	14,5	**2705019**
A50-300	50.000	300	-	180	480	64	218 x 176	36,0	**2705022**
AX100-300	100.000	300	-	150	450	95	330 x 295	87,0	**2705023**
ATDX3-185*	3.000	185	-	215	400	50	126 x 93	4,2	**2707001**
AT5-215*	5.000	215	-	305	520	43	134 x 120	6,3	**2707003**
ATG10-200*	10.000	200	68	262	530	43	164 x 160	8,8	**2707007**
ATPX12-230	12.000	230	85	255	570	50	176 x 185	12,2	**2707009**

Weber ATD 10-120 extreme low jack



Special low-profile hydraulic jack for lifting heavy loads where minimal insertion height is required. Designed for applications with limited ground clearance. Built according to DIN 76024 and VBG 8.

Features

- Extremely low minimum height (from 10 mm).
- Convex base reduces lateral pressure.
- Overload protection via pressure relief valve.
- Operating temperature: –20 °C to +70 °C.
- Compact design for confined spaces.

Application

- Lifting of heavy machinery with low ground clearance.
- Maintenance and repair operations.
- Industrial and workshop use where space is limited.

Options

- Carrying handle optional depending on model.

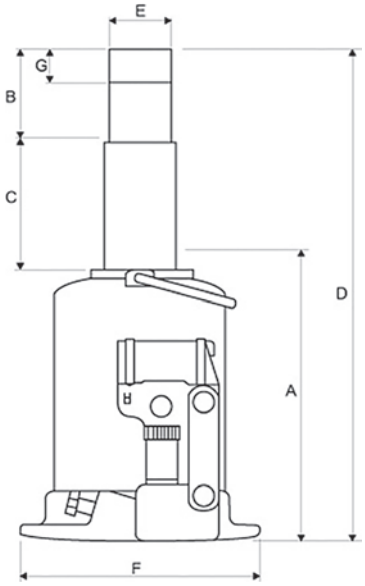

Type	WLL (kg)	A (mm)	B (mm)	C (mm)	D (mm)	E (mm)	F (mm)	G (mm)	Weight (kg)	Article number
ATD10-120	10.000	120	65/105	49	234/274	39,5	164 X 160	5/45	6,9	**2707008**

Rema RMV hydraulic toe jack



Robust steel construction combined with a hydraulic jack, designed for lifting loads on both the toe and the head. The extremely low toe height makes it ideal for use with machines and equipment with minimal ground clearance.

Features

- Overload protection.
- Extremely low toe height.
- Toe adjustable in 3 positions.
- Swivelling support feet.
- Carrying handle.



Application

- Lifting and positioning of heavy machinery and equipment.
- Machine installation and maintenance.
- Suitable for workshops, factories, and industrial environments.

Type	WLL (kg)	Overall height (mm)	Lifting height (mm)	Toe height lowest position (mm)	Weight (kg)	Article number
RMV-3	3.000	245	140	15	21,5	**1803030**
RMV-8	8.000	265	140	20	28,5	**1803080**

Rema RMH hydraulic machine jack



Compact and stable hydraulic jack designed for universal lifting of machines and heavy equipment. The 360° rotatable housing allows use in any position, with precisely controllable lowering speed.

Features

- Compact, stable design.
- Usable in any position.
- Extremely low lifting point.
- Housing rotates 360°.
- Precisely adjustable lowering speed.
- Overload protection.
- Patented design.
- Removable pump lever.



The toe can be positioned at various heights thanks to the rotating housing.

Application

- Repairs, maintenance, and installation of heavy machinery.
- Industrial workshops and production environments.

IMPORTANT

- Never exceed the safe working load.
- Always load the full toe, not just the tip.
- Never add extra load to a raised jack.
- Use only on stable, flat ground.
- The load must be stable during lifting.
- Do not use defective or damaged jacks.
- Annual inspection and testing by qualified personnel required.
- Not permitted to lift persons.

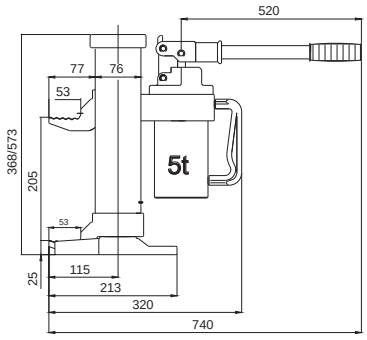

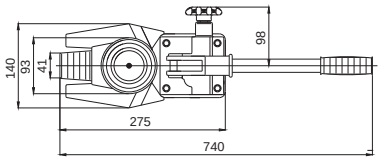

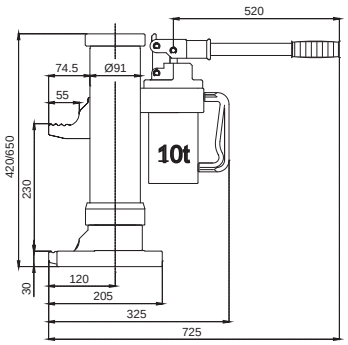

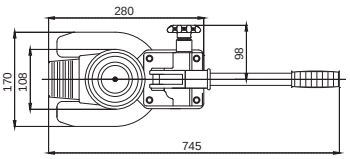

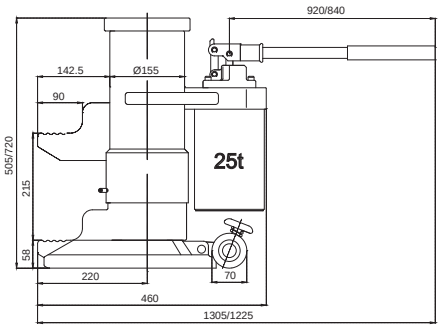

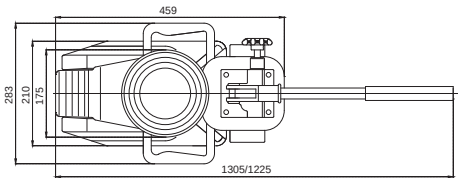

Type	WLL (kg)	Max. hand force (kg)	Weight (kg)	Article number
RMH-50	5.000	38	25,1	**1800050**
RMH-100	10.000	40	35,1	**1800100**
RMH-250	25.000	40	102,1	**1800250**

Rema GWK workshop crane



Compact and easy-to-use folding workshop crane, ideal for garages, workshops and maintenance tasks. Designed for safe and efficient lifting and moving of engines, components and heavy loads.

Features

- Foldable design for easy transport and storage.
- Robust construction.
- Hard-chromed cylinder.
- Swivel wheels, 360° rotatable, with brake.
- Rotating load hook (not under load).
- Lifting arm adjustable in 3 length positions.
- 105% test loaded.
- Safety valve against overload.
- GWK-1000 model with extra-low legs for improved stability.

Application

- Garages, workshops and service stations.
- Lifting and positioning of engines and machine parts.

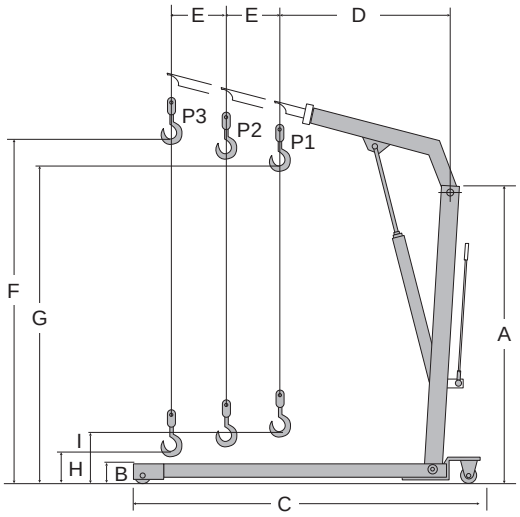

Type	WLL P1 (kg)	WLL P2 (kg)	WLL P3 (kg)	Width (mm)	Weight (kg)	Article number
GWK-500	500	425	350	970	75,0	**4220015**
GWK-1.000	1.000	800	700	1120	115,0	**4220017**
GWK-2.000	2.000	1.700	1.500	1165	165,0	**4220019**

Type	A (mm)	B (mm)	C (mm)	D (mm)	E (mm)	F (mm)	G (mm)	H (mm)	I (mm)
GWK-500	1410	165	1510	895	102	2120	1960	130	340
GWK-1.000	1675	90	1630	1230	150	2445	2330	0	245
GWK-2.000	1690	205	1900	1290	150	2705	2505	0	230

Rema GWKE Europallet workshop crane



Euro pallet–compatible workshop crane, designed for safe lifting operations where standard pallet dimensions (800 × 1200 mm) are used. Robust and foldable design for industrial and workshop environments.

Features

- Easy operation.
- Robust construction.
- Hard-chromed cylinder.
- Swivel wheels, 360° rotatable, equipped with brake.
- Rotating load hook (not under load).
- Lifting arm adjustable in 4 positions.
- 105% test load.
- Safety valve against overload.

Application

- Suitable for use with EURO pallets (800 × 1200 mm).
- Ideal for workshops, factories and logistics operations.

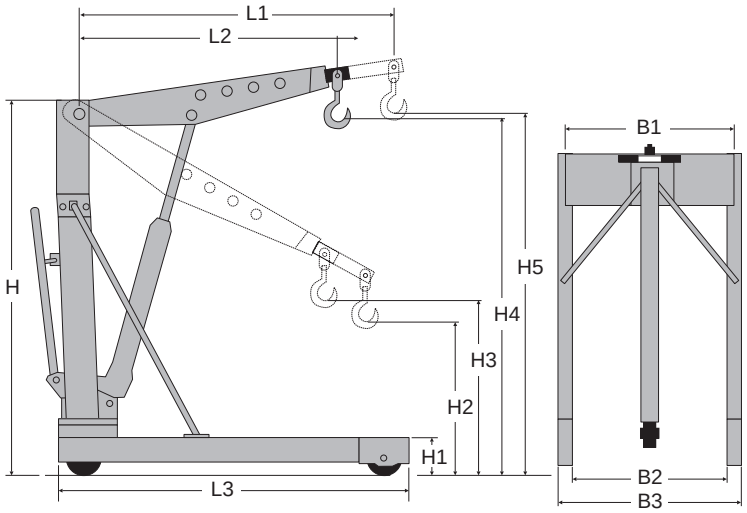

Type	WLL P1 (kg)	WLL P2 (kg)	WLL P3 (kg)	WLL P4 (kg)	Weight (kg)	Article number
GWKE-500	500	450	400	350	81,0	**4220011**
GWKE-1.000	1.000	900	800	700	103,0	**4220013**

Type	B1 (mm)	B2 (mm)	B3 (mm)	H (mm)	H1 (mm)	H2 (mm)	H3 (mm)	H4 (mm)	H5 (mm)	L1 (mm)	L2 (mm)	L3 (mm)
GWKE-500	925	840	1000	1595	155	470	705	2225	2475	1360	1060	1395
GWKE-1.000	925	840	1000	1595	155	470	705	2225	2475	1360	1060	1395

Rema DG10 drum grab



Innovative grab for fast, safe attachment and lifting of 220 L steel and plastic drums (rim Ø 570–610 mm). Can lift drums from both upright and horizontal positions and even pick a single drum from the middle of a group.

Features

- Easy to attach or remove by pulling the grey movable handle over the drum rim.
- Rim range 570–610 mm.
- WLL 1 t.
- Compact, 315 mm overall height; 8 kg.

Application

- Lifting and handling of 220 L steel/plastic drums with rolled rim (Ø 570–610 mm).







Easy to attach or remove

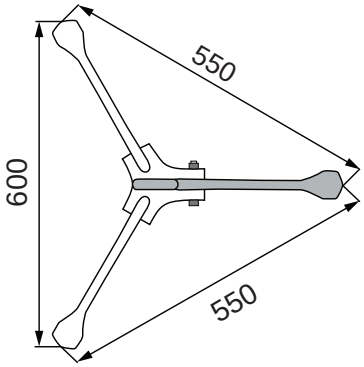

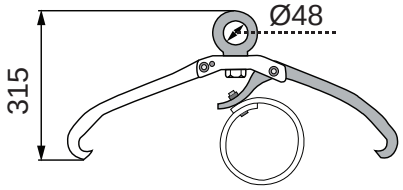

Type	WLL (kg)	Dimensions (mm)	Jaw opening (mm)	Height (mm)	Weight (kg)	Article number
DG10	1.000	550-600	570-610	315	8,0	**3308201**

IMPORTANT
The drums must be fitted with a reinforced rim, with a diamter of 570 to 610 mm







Rema CVA drum clamp



Clamp for safely lifting and handling standing steel barrels filled with liquids; automatic locking.

Features
- Automatic locking mechanism.
- Supplied complete with shackle.

Application
- Vertical lifting/handling of standing steel barrels.

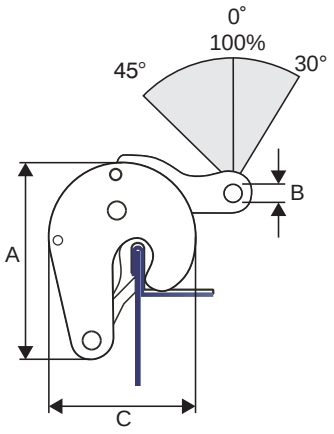

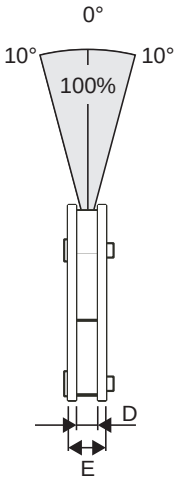



Type	WLL (kg)	Jaw opening (mm)	A (mm)	B (mm)	C (mm)	D (mm)	E (mm)	Weight (kg)	Article number
CVA-0.5	500	0 - 17	121	12	96	15	28	1,6	**3308001**

Rema CVB drum clamp



For safe lifting/handling while the drum is kept steadily in the vertical position.

Features
- Easily operable locking mechanism.
- Complete with suspension eye.

Application
- Vertical lifting and positioning of drums.

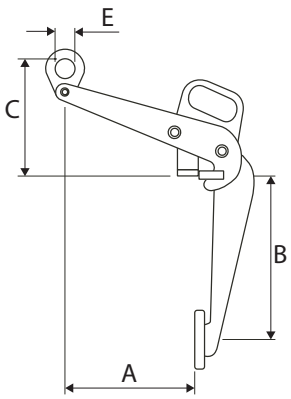

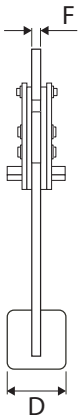

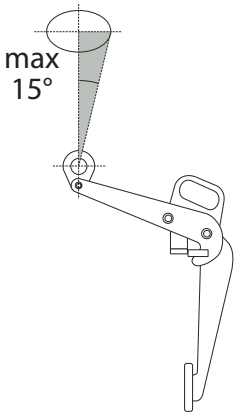

Type	WLL (kg)	A (mm)	B (mm)	C (mm)	D (mm)	E (mm)	F (mm)	Weight (kg)	Article number
CVB-0.5	500	305	434	330	100	50	10	7,1	**3308003**

Rema drum chain assembly (G6)



Grade 8 chain assembly for safely lifting and moving steel drums in horizontal position.

Composition:
- 1× RML-86-G10 master link
- 2× RCX-6 mm C-link
- 1.8 m chain 6×18 mm
- 2× S-377 drum hooks.

Application
- Horizontal lifting/transfer of steel drums.

Type	WLL (kg)	Article number
RML-RCX-S377-1800	1.000	**2629020**

Rema DD drum dolly



Simple aid for moving 210 L steel drums.

Features
- Frame welded from steel band.
- Swivel wheels with zinc-coated brackets.
- Treads resistant to oil and water.
- Zinc-coated bolts and nuts.

Application
- In-plant transport of 210 L steel drums on flat floors.

Type	WLL (kg)	Diameter (mm)	Weight (kg)	Article number
DD-210	410	600	5,0	**4252007**

Rema VK drum clamps



Family of clamps suitable for lifting multiple drum types/sizes.

Features
- VK-350: open/closed steel drums.
- VK-360: open/closed steel drums & plastic drums with L- or X-rings.
- VK-500: open/closed steel drums.
- VKH-500: horizontal transport of steel drums.
- Can be used with a hoist or fork-hook attachments.

Application
- Vertical (VK-350/360/500) drum handling.
- Horizontal (VKH-500) drum handling.

Type	WLL (kg)	Weight (kg)	Article number
VK-350	350	9,5	**3308101**
VK-360	360	4.5	**3308103**
VK-500	500	5	**3308105**
VKH-500	500	7,6	**3308107**

Rema DTS forklift drum clamp



Fork-mounted clamp for transporting 210 L steel drums (max Ø 570 mm) with automatic grip by the drum's own weight.

Features
- Dead-weight clamping of full drum.
- Quick mounting: slide onto forks and lock.
- Robust steel construction.
- Supplied with a safety chain for securing to the forklift fork carriage.

Application
- Forklift transport of 210 L steel drums on flat floors/ yard areas.

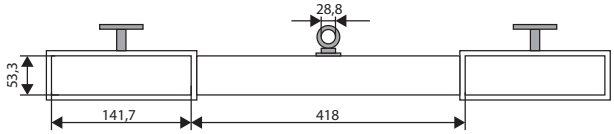

Type	WLL (kg)	Jaw opening (mm)	Weight (kg)	Article number
DTS-10	450	572	55,0	**4252005**

Rema DH hydraulic drum trolley



Hydraulic drum trolley for vertical transport of 210 L steel drums (WLL 250 kg).

Features

- Easy operation via hydraulic pump.
- Excellent manoeuvrability: two large side wheels + one braked swivel wheel.
- Model DH-250: lifting height 345 mm; drum height max. 915 mm; weight 40 kg.

Application

- Horizontal lifting/transfer of steel drums.

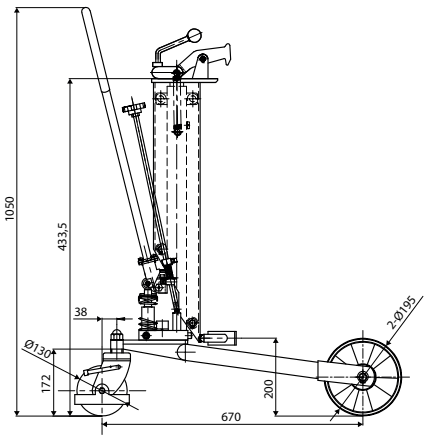

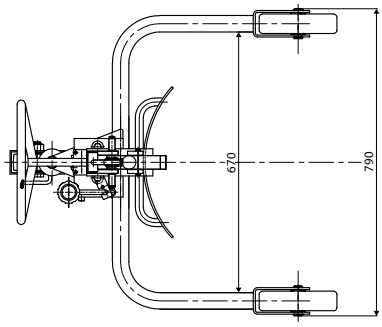

Type	WLL (kg)	Lifting height (mm)	Max. height drum (mm)	Weight (kg)	Article number
DH-250	250	345	915	40,0	**4252001**

Rema DM movable drum trolley



Trolley for lifting, transporting, tipping and emptying 210 L steel drums; includes secure locking in vertical and horizontal positions.

Features

- Tipping arrangement with locking in both positions.
- Model DM-365: WLL 0.365 t; lifting height 292 mm; drum height 915 mm; weight 50 kg.

Application

- Full-cycle handling of 210 L steel drums: lift, move, tilt and empty at the workstation.



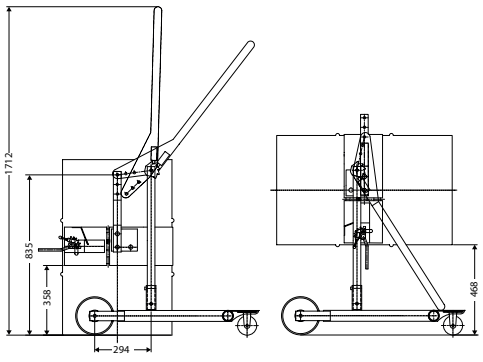

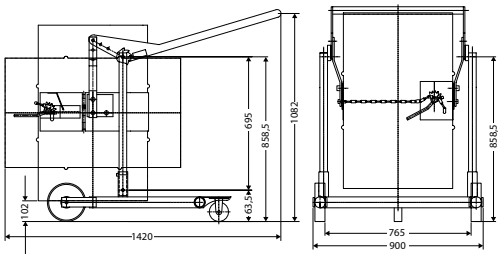

Type	WLL (kg)	Dimensions L x B (mm)	Lifting height (mm)	Max. height drum (mm)	Weight (kg)	Article number
DM-365	365	1420 x 900	292	915	50,0	**4252003**

Rema TRV transport skate



Compact nylon-roller skates, ideal for safe and easy moving of heavy loads on flat surfaces. Protect floors against damage.

Features

- Nylon rollers with bearings.
- Nylon prevents floor damage.
- Platforms covered with anti-slip rubber.
- Easy to move or position via handle.

Standard delivery

- Single unit.

Type	WLL (kg)	Number of axles	Platform dimensions L × W × H (mm)	Number of rollers	Roller size × width (mm)	Weight (kg)	Article number
TRV-10	1.000	2	330 x 220 x 118	4	100 x 35	7,0	**4250021**
TRV-20	2.000	2	330 x 220 x 118	8	100 x 35	8,0	**4250023**
TRV-25	2.500	2	210 x 110 x 105	2	85 x 90	4,0	**4250025**
TRV-30	3.000	2	330 x 220 x 100	4	85 x 90	10,0	**4250027**
TRV-60	6.000	3	260 x 200 x 105	6	85 x 90	12,0	**4250029**

Rema TRZ swivel skate



Transport skates fitted with swivel wheels for manoeuvrability.

Features

- TRZ-102 with 2 swivel + 2 fixed rollers.
- TRZ-104 with 4 swivel rollers.
- Nylon wheel type.

Standard delivery

- Single unit.

Type	WLL (kg)	Number of rollers	Platform dimensions L × W × H (mm)	Dimensions roller x width (mm)	Material	Weight (kg)	Article number
TRZ-102	1.000	4	430 x 340 x 120	75 x 46 / 100 x 35	Nylon	13,0	**4250031**
TRZ-104	1.000	4	430 x 340 x 120	75 x 46	Nylon	14,0	**4250033**

Rema TKV/TBV furniture movers



TKV



TBV

Furniture moving skates for safely transporting cabinets, desks or machines.

Features

- Each mover fitted with 3 swivel rollers for manoeuvrability.
- Rubber-coated to protect the load.
- TKV = for loads without legs (cabinets, crates).
- TBV = for loads with legs (tables, desks).

Standard delivery

- Set of 4.

Type	WLL (kg)	Number of rollers	Dimensions (mm)	Material	Weight (kg)	Article number
TKV-100K	400	3	315 x 165 x 75	Nylon	5,6	**4250051**
TBV-100B	400	3	235 x 165 x 75	Nylon	4,8	**4250053**
TKV-150K	600	3	368 x 200 x 85	Nylon	8,0	**4250055**

Rema TRS steering skate



Steerable skates with turntable platform for easy positioning of heavy loads.

Features
- Turntable platform with bearings for manoeuvrability.
- Nylon rollers (TRS-120: steel rollers).
- Platforms covered with anti-slip rubber.
- Easy to move via handle.

Standard delivery
- Per set.

Type	WLL (kg)	Number of rollers	Platform dimensions L × W × H (mm)	Dimensions roller x width (mm)	Material	Weight (kg)	Article number
TRS-30	3.000	4	310 x 255 x 105	85 x 90	nylon	15,0	**4250001**
TRS-60	6.000	8	630 x 400 x 115	85 x 90	nylon	50,0	**4250003**
TRS-120	12.000	8	630 x 400 x 115	83 x 80	staal	66,0	**4250005**

Rema TRW roller skate



Heavy-duty roller skates connectable via shafts. Always supplied as a pair.

Features
- Nylon rollers with bearings.
- TRW-240 fitted with steel rollers.
- Supplied complete with 2 connecting shafts.

Standard delivery
- Per set.

Type	WLL (kg)	Number of rollers	Platform dimensions L × W × H (mm)	Dimensions roller x width (mm)	Material	Weight (kg)	Article number
TRW-60	6.000/2	8	315 x 200 x 115	85 x 90	nylon	30,0	**4250011**
TRW-120	12.000/2	12	420 x 200 x 115	85 x 90	nylon	38,0	**4250013**
TRW-240	24.000/2	16	490 x 220 x 115	83 x 85	staal	65,0	**4250015**

Rema RTRS transport skate set



Complete transport skate set with steerable turntable skate and two roller skates for moving heavy machines.

Features
- Polyurethane rollers.
- Platforms covered with anti-slip rubber.
- Easy to handle and move via handle.
- From model RTRS-16T fitted with transport eye.

Standard delivery per set
- Set contains: 1 steerable skate + 2 roller skates.

Type	WLL (kg)	Number of rollers	Steerable skate dimensions (mm)	Roller skate dimensions (mm)	Turntable (mm)	Handle length (mm)	Weight (kg)	Article number
RTRS-8T	8.000	4	230 x 230 x 110	170 x 140 x 110	Ø 150	800	31,0	**4250108**
RTRS-16T	16.000	8	560 x 420 x 110	200 x 200 x 110	Ø 160	1100	76,0	**4250116**
RTRS-24T	24.000	12	750 x 450 x 110	256 x 200 x 110	Ø 180	1100	106,0	**4250124**
RTRS-36T	36.000	18	780 x 550 x 110	300 x 550 x 110	Ø 200	1500	148,0	**4250136**

Rema TS skate set



Complete skate set for short-distance machine moves. Supplied in metal transport case with drawbar.

Application

- Designed for installation work and machine relocation.
- Max travel speed 5 m/min.
- Minimum turning circle 3 m.

Standard delivery

- Complete set in metal transport case with drawbar.
- Includes: 4 skates, 2 turntables, 2 lifting blocks, 2 steering handles, 2 connecting rods.

Type	WLL (kg)	Platform dimensions L × W × H (mm)	Turntable (mm)	Roller diameter (mm)	Weight (kg)	Article number
TS-20	20.000	120 x 120 x 108	130	18	50,0	**4211003**
TS-30	30.000	120 x 120 x 117	130	24	58,0	**4211005**
TS-60	60.000	130 x 130 x 140	150	30	92,0	**4211007**

Rema TRH roller pinch bar



Heavy-duty roller pinch bar designed for pre-lifting and positioning loads before moving them with transport skates. Provides the necessary initial lift to place skates under machines or equipment.

Application

- Robust steel tube construction.
- Ergonomic design for safe handling.
- Ideal for use with skates in machine moving operations.

Standard delivery

- Single unit.

Type	WLL (kg)	Lever length (mm)	Lifting height (mm)	Roller diameter (mm)	Weight (kg)	Article number
TRH-15	1.500	2000	130	70 x 55	13,0	**4250040**

Rema HT mobile manual lifting table



HT-25 / HT-100

Type HT = single scissor
Type D = double scissor
HT-15 = with foldable handle

Ergonomic solution for lifting parts and tools to working height during machine maintenance or assembly. Available in single-scissor (HT) and double-scissor (D) versions for extended lifting height.

Features
- Hydraulic pump with overload valve for safety.
- Lifting via foot pedal.
- Controlled lowering via operating handle.
- Two fixed wheels + two swivel wheels with brake.
- HT-15 supplied with foldable push handle; other models with fixed handle.



HT-15



HT-15 folded



HT-D (double scissor)

Type	WLL (kg)	Platform dimensions (mm)	Overall height min. (mm)	Push handle height max. (mm)	Handle height (mm)	Wheel diameter (mm)	Weight (kg)	Article number
HT-15	150	700 x 450	260	765	1000	100	41,0	**3460015**
HT-25	250	815 x 500	310	910	1100	125	78,0	**3460025**
HT-50	500	1010 x 520	420	1010	1130	150	118,0	**3460050**
HT-75	750	1010 x 520	420	1010	1130	150	120,0	**3460075**
HT-100	1.000	1010 x 520	430	955	1130	150	145,0	**3460100**
HT-50D	500	1010 x 520	435	1585	1130	150	168,0	**3460150**

Rema HTR stainless steel mobile manual lifting table



Designed for the pharmaceutical, chemical and food industries. Manufactured from stainless steel AISI-304 (pump and cylinder in galvanized steel).

Features
- Hydraulic pump with overload protection.
- Lifting via foot pedal.
- Lowering via operating handle.
- Two fixed wheels + two braked swivel wheels.
- Nylon wheels.
- Movable via push handle.

Standard delivery
- Corrosion-resistant construction for hygiene-critical environments.

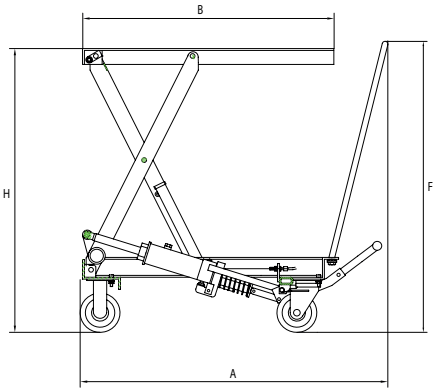

Type	WLL (kg)	Platform dimensions (mm)	Platform height min. (mm)	Platform height max. (mm)	Push handle height (mm)	Wheel diameter (mm)	A (mm)	B (mm)	C (mm)	F (mm)	H (mm)	Weight (kg)	Article number
HTR20	200	830 x 500	335	915	1010	125	1100	830	500	1010	335-915	76,0	**3460201**

Rema HS stationary electric lifting table



Universal stationary scissor lift table for lifting heavy loads. The table can be floor-mounted or installed in a pit for space-saving, flush integration at floor level.

Features
- Robust base frame with reinforced platform.
- Safety contact strip on all sides.
- Inspection props for safe maintenance.
- Overload protection.
- Hose rupture safety valve.
- Hard-chromed cylinder and piston rod.
- Compact power unit.
- Equipped with S3 motors (intermittent duty).
- Limit switch for top position.

Technical specifications
- Capacity: 1,000–3,000 kg (depending on model).
- Lifting height: up to 1,000 mm.
- Platform sizes: e.g. 1,300 × 800 mm (other sizes available).
- Lifting speed: approx. 20 mm/s.
- Power supply: 400 V, 50 Hz, 3 Ph.
- Control voltage: 24 V.
- Protection class: IP54.
- Duty cycle: S3 (intermittent operation).



Profile-reinforced platform

Technical specifications
- Industrial production environments.
- Assembly workstations requiring higher lift.
- Storage and logistics.
- Suitable for pit installation.

Standard delivery
- 24 V control box with emergency stop.
- Removable lifting eyes for easy transport.

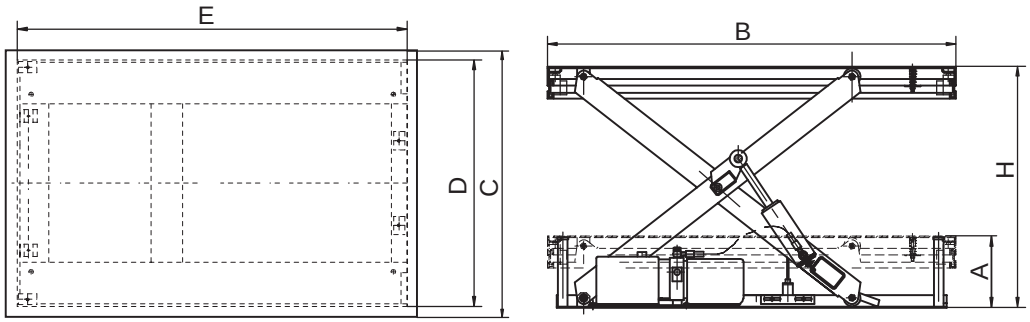

Type	WLL (kg)	Lifting time (sec)	Lift/lower cycles per hour	Power (kW)	Weight (kg)	Article number
HS05-01	500	25	21	1,1	193,0	**3459005**
HS1-01	1.000	20	21	0,75	160,0	**3459001**
HS1-04	1.000	30	15	1,1	210,0	**3459007**
HS2-01	2.000	20	21	1,5	235,0	**3459002**
HS2-06	2.000	35	15	2,2	375,0	**3459003**
HS4-01	4.000	40	13	2,2	375,0	**3459004**
HS4-06	4.000	45	10	2,2	505,0	**3459006**

Type	A (mm)	B (mm)	C (mm)	D (mm)	E (mm)	H (mm)
HS05-01	243	2000	800	680	1615	1043
HS1-01	248	1300	820	640	1240	1033
HS1-04	283	1700	1000	640	1580	1343
HS2-01	273	1300	850	785	1220	1043
HS2-06	293	2000	1000	785	1600	1343
HS4-01	288	1700	1200	900	1600	1098
HS4-06	348	2200	1200	900	2000	1448

HSD stationary electric lifting tables



Stationary double-scissor lift table for applications requiring increased lifting height. Can be floor-mounted or installed in a pit. Provides safe and ergonomic handling and storage in industrial environments.

Technical specifications
- Aluminium safety contact strip.
- Profile-reinforced platform.
- Overload protection.
- Special valve for controlled lowering.
- Hose rupture safety valve.
- Hard-chromed cylinder and piston rod.
- Equipped with S3 motors (intermittent duty).
- Inspection props for safe servicing.
- Limit switch for top position.

Technical specifications
- Capacity: 1,000–3,000 kg (depending on model).
- Lifting height: up to 2,000 mm (double scissor).
- Platform sizes: e.g. 1,300 × 800 mm (other sizes available).
- Lifting speed: approx. 20 mm/s.
- Power supply: 400 V, 50 Hz, 3 Ph.
- Control voltage: 24 V.
- Protection class: IP54.
- Duty cycle: S3 (intermittent operation).

Technical specifications
- Industrial production environments.
- Assembly workstations requiring higher lift.
- Storage and logistics.
- Suitable for pit installation.

Standard delivery
- 24 V control box with emergency stop.
- Removable lifting eyes for easy transport.

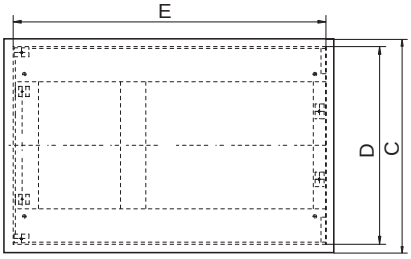

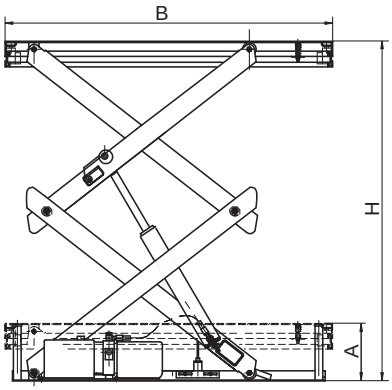

Type	WLL (kg)	Lifting time (sec)	Lift/lower cycles per hour	Power (kW)	Weight (kg)	Article number
HSD-1.0	1.000	35	12	2.2	210,0	**3459031**
HSD-2.0	2.000	35	12	2.2	295,0	**3459033**
HSD-4.0	4.000	55	8	2.2	520,0	**3459035**

Type	A (mm)	B (mm)	C (mm)	D (mm)	E (mm)	H (mm)
HSD-1.0	348	1300	820	680	1266	1823
HSD-2.0	403	1300	850	785	1255	1823
HSD-4.0	448	1700	1200	930	1600	2098

Rema HSL low-profile stationary electric lifting table



Low-profile stationary lifting table with a practical ramp, eliminating the need for pit installation. Ideal for loading and unloading using pallet trucks or trolleys. Saves installation costs and enables simple integration into workflows.

Features

- Stable low base frame.
- Solid steel scissor arms.
- Aluminium safety contact strip on all sides.
- Overload protection.
- Hose rupture safety valve.
- Hard-chromed cylinder and piston rod.
- Inspection props for safe maintenance.
- External power unit.
- Ramp with 5° incline angle.
- Limit switch for top position.

Technical specifications

- Capacity: 1,000–2,000 kg.
- Lifting height: up to 760 mm.
- Platform sizes: e.g. 1,450 × 1,145 mm.
- Ramp angle: 5°.
- Lifting speed: approx. 20 mm/s.
- Power supply: 400 V, 50 Hz, 3 Ph.
- Control voltage: 24 V.
- Protection class: IP54.
- Duty cycle: S3 (intermittent).

Applications

- Loading and unloading of pallet trucks and trolleys.
- Logistics and warehousing.
- Packing and distribution centres.
- Industrial production environments.

Options

- 24 V push-button control box with emergency stop.
- Removable lifting eyes (also usable as inspection props).
- Ramp included.



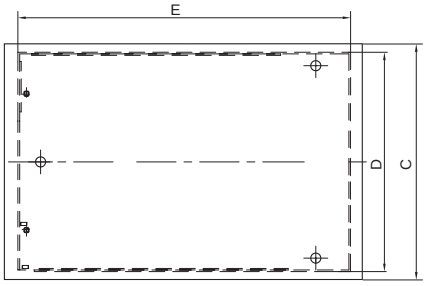

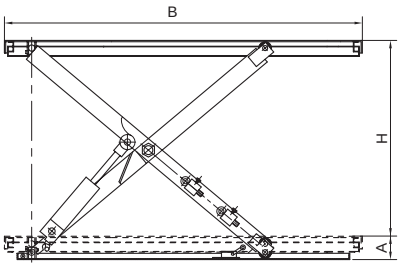

Type	WLL (kg)	Lifting time (sec)	Lift/lower (cycles/h)	Power (kW)	Ramp dimensions L × W × D (mm)	Weight (kg)	Article number
HSL-1.0	1.000	20	21	0,75	900 x 1140 x 85	302,0	**3459011**
HSL-2.0	2.000	20	15	2,2	973 x 1200 x 105	390,0	**3459015**

Type	A (mm)	B (mm)	C (mm)	D (mm)	E (mm)	H (mm)
HSL-1.0	85	1600	1140	1074	1325	860
HSL-2.0	105	1600	1200	1114	1427	870

Rema HSU low-profile U-shaped stationary electric lifting table



U-shaped low-profile stationary lift table with open centre section. Designed for direct use with pallet trucks without the need for a ramp or pit. Enables fast and ergonomic handling of pallets and loads..

Features

- Stable low base frame.
- Aluminium safety contact strip on all sides.
- Overload protection.
- Hose rupture safety valve.
- Hard-chromed cylinder and piston rod.
- Long-life lubricated bearings.
- External power unit.
- Equipped with S3 motors (intermittent duty).
- Limit switch for top position..

Technical specifications

- Capacity: 1,000–2,000 kg (depending on model).
- Lifting height: up to 760 mm.
- Platform size: e.g. 1,450 × 1,450 mm (U-frame inner opening approx. 585 mm).
- Lifting speed: approx. 20 mm/s.
- Power supply: 400 V, 50 Hz, 3 Ph.
- Control voltage: 24 V.
- Protection class: IP54.
- Duty cycle: S3 (intermittent).

Applications

- Loading and unloading of pallet trucks without ramp.
- Warehouses and distribution centres.
- Production and assembly lines.
- Suitable where pit installation is not possible.

Options

- 24 V push-button control box with emergency stop.
- Removable lifting eyes (also usable as inspection props).

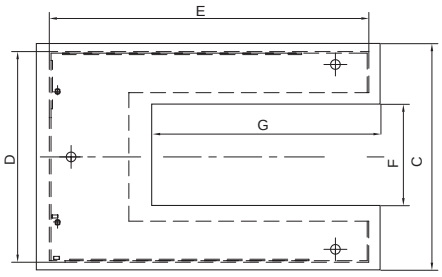

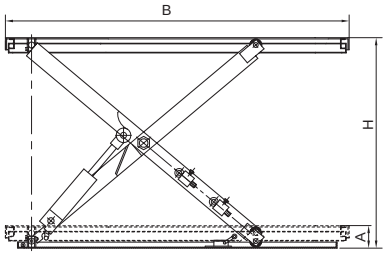

Type	WLL (kg)	Lifting time (sec)	Lift/lower (cycles/h)	Power (kW)	Weight (kg)	Article number
HSU-1.0	1.000	18	20	0,75	280,0	**3459017**
HSU-1.5	1.500	18	20	1,5	380,0	**3459019**

Type	A (mm)	B (mm)	C (mm)	D (mm)	E (mm)	F (mm)	G (mm)	H (mm)
HSU-1.0	85	1450	1140	1074	1325	585	1080	860
HSU-1.5	105	1600	1180	1114	1427	585	1194	860

Rema HTH forklift hook



Turns a forklift into a mobile lifting crane. Quick to install on the forks, secured with screw clamps and a safety chain around the fork carriage. Fitted with a swivel hook.

Features

- Converts forklift into lifting device.
- Simple installation on forks.
- Secured with screw clamps and safety chain.
- Supplied with swivel hook.

Technical specifications

- Fits standard fork sections.
- Capacity depending on forklift capacity.

Applications

- Suitable for lifting operations where no crane is available.

Load must not exceed the forklift's rated capacity.
Centre the load on the forks where possible.
Prevent excessive swinging of the load during transport.

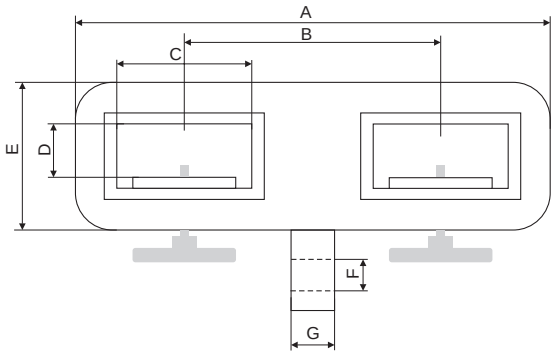

Type	WLL (kg)	Fork opening (mm)	Weight (kg)	Article number
HTH-1000	1.000	125 x 50	14,0	**3963501**
HTH-2500	2.500	135 x 55	25,0	**3963503**
HTH-5000	5.000	145 x 55	46,0	**3963505**

Type	A (mm)	B (mm)	C (mm)	D (mm)	E (mm)	F (mm)	G (mm)
HTH-1000	437	255	135	55	116	24	16
HTH-2500	657	450	145	60	140	27	20
HTH-5000	600	420	180	100	175		

Rema HKA forklift jib crane arm

Telescopic jib crane arm for forklifts, providing extended reach and variable lifting positions. Designed for safe handling of loads at a distance.



Features
- Telescopic design with 10 positions.
- Adjustable lifting angle in 4 steps.
- Supplied with swivel hook.
- Secured by screw clamps and safety chain around fork carriage.

Technical specifications
- Fork pocket 2,000 kg: 180 × 80 mm.
- Fork pocket 3,000 kg: 225 × 80 mm.

Application
- Ideal for assembly, dismantling and maintenance work.

Always check forklift capacity and jib crane arm load rating before use.

Type	WLL (kg)	Length (mm)	Width (mm)	Weight (kg)	Article number
HKA-2.0	2.000	2165-3740	520	175,0	**3965002**
HKA-3.0	3.000	2165-3740	643	280,0	**3965003**
HKA-5.0	5.000	2165-3740	643	295,0	**3965005**

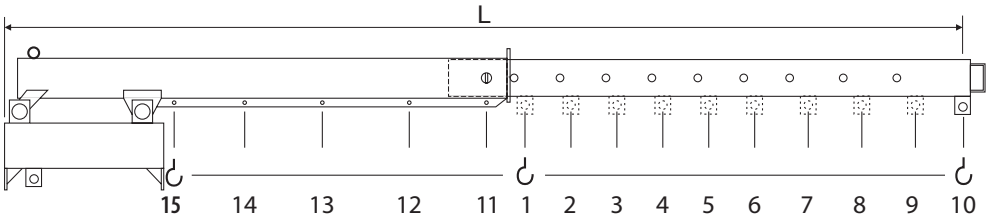

Rema GHC forklift jack



Telescopic jib crane arm for forklifts, providing extended reach and variable lifting positions. Designed for safe handling of loads at a distance.

Features
- Safe working load (toe) 4,000 kg.
- Safe working load (head) 5,000 kg.
- Two lifting points (toe and head).
- Overload protection.
- Dual lifting speed: 60 strokes normal / 20 strokes quick lift, with or without load.

Technical specifications
- SWL toe: 4,000 kg.
- SWL head: 5,000 kg.

Application
- For maintenance and service of forklifts and heavy equipment.

Use only on solid, level surfaces.

Type	WLL (kg)	Dimensions L × W × H (mm)	Overall height (mm)	Lifting height (mm)	Weight (kg)	Article number
GHC-5	5.000	680 x 210 x 415	65-425	414-724	47,0	**4260030**

Rema GHB forklift axle stand



Supplied per pair and only use in pairs

Axle stands designed to support forklifts or heavy equipment safely after lifting. Ideal to be used in combination with the GHC forklift jack.

Features
- Heavy-duty construction.
- 3-position height adjustment.
- Supplied per pair only.

Technical specifications
- Adjustable height (3 levels).
- Capacity per pair.

Application
- For safe support of forklifts and equipment during service and repair.

Important:
- Always use in pairs.
- Never exceed rated capacity.

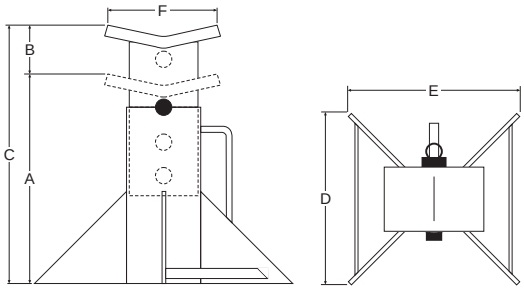

Type	WLL (kg)	A (mm)	B (mm)	C (mm)	D (mm)	E (mm)	F (mm)	Weight (kg)	Article number
GHB-6	12.000/2	242	55	425	220	220	110	15,0	**4261030**

9



Pallet trucks 242

Special-purpose pallet trucks 243

Wheels for pallet trucks 245

High-lift pallet trucks and skid lifters 246

Pallet hooks 247

Winch stacker and pallet pullers 248

Rema P25 pallet truck



Everyday all-rounder, controlled foot-pedal lowering

Reliable, high-quality pallet truck. The comfort grip controls lifting, lowering and travel. Controlled lowering is also possible via the foot pedal on the hydraulic pump. Large, low-noise polyurethane steering wheels and tandem fork rollers ensure smooth running and easy manoeuvring, even on uneven floors. Entry/exit rollers make it easy to roll in and out of pallets.

Features
- Pump unit with overload protection.
- Steel frame with orange powder coating.
- Foot pedal for controlled lowering under load.
- Entry/exit rollers for easy pallet access.

Operation
- Three-position control lever (lift / neutral / lower).
- Foot-pedal assisted lowering.

Forks
- Tandem fork rollers for smoother running on rough floors.

Technical specifications
- Max fork height 200 mm.
- Steering wheel Ø 200 mm, polyurethane.
- Fork width Ø 160 mm, polyurethane (tandem).
- Overall width 540 mm.

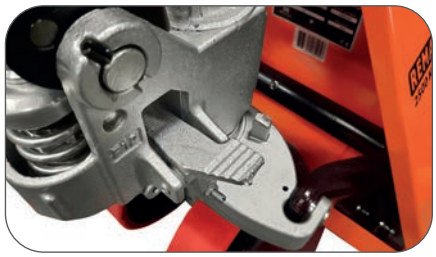

Auxiliary foot pedal for precise, controlled lowering.



Euro-pallet reference mark on the forks for quick positioning.



Lead-in/lead-out rollers for smooth pallet entry and exit.

Type	WLL (kg)	Fork rollers	Dimensions (mm)	Lowest height (mm)	Width per fork (mm)	Steering wheels material (200 x 50mm)	Fork rollers (mm)	Weight (kg)	Article number
P25-P/TP-1150/540-2.5T	2500	tandem	1150 x 540	85	160	polyurethan/tandem polyurethan	80x70	69	3402101
P25-R/SP-1000/540-2.5T	2500	single	1000 x 540	85	160	rubber/single polyurethan	80x93	67	3402105
P25-N/TN-1150/540-2.5T	2500	tandem	1150 x 540	85	160	nylon/tandem nylon	80x70	63	3402111
P25-N/TN-1150/685-2.5T	2500	tandem	1150 x 685	85	160	nylon/tandem nylon	80x70	70	3402112
P25-R/TP-1150/540-2.5T	2500	tandem	1150 x 540	85	160	rubber/tandem polyurethan	80x70	67	3402113
P25-N/TN-1000/685-2.5T	2500	tandem	1000 x 685	85	160	nylon/tandem nylon	80x70	67	3402114
P25-R/TP-1000/540-2.5T	2500	tandem	1000 x 540	85	160	rubber/tandem polyurethan	80x70	63	3402115
P25-R/SP-800/540-2.5T	2500	single	800 x 540	85	160	rubber/single polyurethan	80x93	56	3402117
P25-N/TN-1500/540-2.0T	2000	tandem	1500 x 540	85	160	nylon/tandem nylon	80x70	80	3402121
P25-N/TN-2000/540-2.0T	2000	tandem	2000 x 540	85	160	nylon/tandem nylon	80x70	92	3402123
P25-N/TN-1800/540-2.0T	2000	tandem	1800 x 540	85	160	nylon/tandem nylon	80x70	90	3402125

Rema HPTR semi stainless steel pallet truck



Food-grade semi-stainless with zinc protection

Semi-stainless pallet truck designed for food and hygiene-critical environments; European made. Stainless components are combined with zinc-plated parts for robust corrosion protection.

Features
- Stainless frame parts, tiller, axles, bolts and pins.
- Zinc-plated steer-axle yoke and front/rear fork roller brackets.
- Resistant to aggressive cleaning agents (salt, detergents).
- Reliable hydraulic pump with automatic neutral valve.
- Pump body zinc-plated and powder coated for extra durability.

Technical specifications
- Wheels/rollers: nylon (steer and fork rollers).
- Tandem fork rollers as standard.

Standard delivery
- Nylon steering wheels and tandem fork rollers.

Type	WLL (kg)	Dimensions (mm)	Lowest height (mm)	Width per fork (mm)	Steering wheels material (Ø 200 mm)	Fork rollers material	Weight (kg)	Article number
HPTR 449 TR/3	2.500	1130 x 520	85	160	Nylon	Nylon	74	**2804023**

Rema PTZ/P30 heavy duty pallet truck



Heavy-duty performance

Heavy-duty pallet truck for extra-high loads.

Features
- Special high-capacity pump for easy lifting of heavy loads.
- PTZ-50 supplied with lifting eyes for transport and tie-down.
- PTZ-50 fitted with steel wheels; PTZ-30 with nylon wheels.

Technical specifications
- Variants: PTZ-30 and PTZ-50 (capacity per model).
- Steering wheel Ø 200 mm.
- Fork rollers Ø 80x70 mm.
- Overall fork width PTZ-30 540 mm.
- Overall fork width PTZ-50 580 mm.



PTZ-30TNN



Lifting eyes: PTZ-50TSS

Type	WLL (kg)	Dimensions (mm)	Lowest height (mm)	Width per fork (mm)	Steering wheels material	Fork rollers material	Weight (kg)	Article number
P30-N/TN-1150/540-3.0T	3.000	1150 x 540	85	160	Nylon	Nylon	71	**3410030**
PTZ-5.0TSS	5.000	1150 x 580	90	210	Steel	Steel	155	**3401050**

Rema PTE ultra low pallet truck (PTE and PTE-X)



Ultra-low entry pallet truck for very low pallets and special skids.

Features PTE
- Low profile 55 mm.
- Lift range 51–165 mm.
- Steering wheels rubber 180 × 50 mm.
- Polyurethane fork rollers Ø 50 × 61 mm.

Features PTE-X
- Extremely low profile 36 mm.
- Lift range 36–100 mm.
- Steering wheels PU 145 × 50 mm.
- Steel fork rollers Ø 34 × 58 mm.

Type	WLL (kg)	Dimensions (mm)	Lowest height (mm)	Width per fork (mm)	Steering wheels material	Fork rollers material	Weight (kg)	Article number
PTE-200TPR	2.000	1150 x 540	55	160	Rubber	Polyurethane	72,0	**3410041**
PTE-X 200TPS	1.000	1150 x 540	36	160	Polyurethane	Steel	70,0	**3410042**

Rema PTW weighing pallet truck



Pallet truck with integrated scale

Weighing pallet truck with digital metric display unit for on-the-spot weighing during handling.

Features
- Digital display unit with protective cover.
- Four measuring points integrated in the forks.
- Accuracy approx. 0.1% (≈2 kg at 2,000 kg).
- 18 mm LED digits, 1 kg resolution.
- Auto power-off to save batteries.
- IP65 (NEMA 4) A30-type housing.

Features PTE-X
- Power: 4 × AA batteries.
- Typical battery life: ~1 year at ~10 weighings/day.
- Operating temperature: –10 °C to +40 °C.
- Steering wheels PU Ø 180x50 mm.
- Forkrollers PU Ø 70x70 mm.



Digital display unit (cover open)



Protective cover closed (display protected).

Type	WLL (kg)	Dimensions (mm)	Lowest height (mm)	Width per fork (mm)	Steering wheels material	Fork rollers material	Weight (kg)	Article number
PTW-N	2.000	1150 x 555	85	180	Polyurethane	Polyurethane	120,0	**3401047**

Wheels for Rema pallet trucks

Choose the right wheel for your application

The wheel material determines rolling effort, noise, floor protection and durability. Select based on load, floor type and environment.



Polyurethane wheels (PU)

Best for: indoor, smooth floors; low noise required.

- Low rolling noise; suitable for noise-sensitive areas.
- High wear resistance; long service life under intensive use.
- Good floor protection; non-marking grades available.
- Comfortable ride; absorbs minor floor irregularities.



Nylon wheels (NY)

Best for: indoor, smooth floors; low noise required.

- Highest load capacity relative to size.
- Very low rolling resistance; easy manoeuvring under load.
- Low maintenance; moisture- and chemical-resistant.
- Hard tread for precise steering.



Rubber wheels (RU)

- Excellent grip and damping; comfortable for the operator.
- Reduced vibration; protects load and truck.
- Performs on rough or irregular surfaces.

Steering wheels: mounted on the tiller for steering and travel comfort

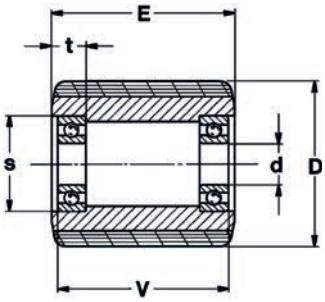

Pallet truck model	Steering wheels material	D (mm)	E (mm)	d (mm)	t (mm)	V (mm)	s (mm)	Article number
PTS	NY	80	70	20	14	70	47	**4458035**
PTS	PU	80	70	20	14	70	47	**4458036**
PTS	NY	80	90	20	14	96	47	**4458038**
PTS	PU	82	96	20	14	96	47	**4458039**
PTS	PU	51	61	20	14	61	47	**4458041**
PTS	PU	51	81	20	14	61	47	**4458042**
PTS	PU	82	60	20	14	56	47	**4463883**
PTH	PU	80	70	20	14	70	47	**4630001**

Fork rollers: mounted under the forks for load support and entry/exit

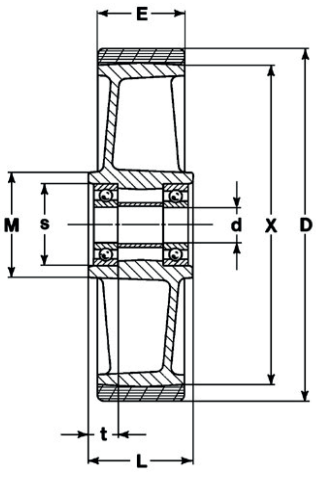

Pallet truck model	Fork rollers material	D (mm)	E (mm)	d (mm)	t (mm)	V (mm)	s (mm)	Article number
PTS	NY	200	50	20	20	56	47	**4458014**
PTS	PU	200	50	20	20	56	47	**4458015**
PTS	RU	200	50	20	20	56	47	**4458017**
PTS	NY	180	50	20	20	56	47	**4458018**
PTS	PU	180	50	20	20	56	47	**4458019**
PTS	RU	180	50	20	20	56	47	**4458021**
PTS	RU	140	50	20	20	56	47	**4458025**
PTH	PU	200	50	20	20	56	47	**4630017**

NY = Nylon / RU = Rubber / PU = Polyurethane

PTH-M manual high lifter pallet truck



Manual high-lifting pallet truck combining the functionality of a pallet truck with the lifting height of a scissor lift table. Ideal for ergonomic working heights when loading, unloading or handling goods.

Features

- Fitted with stabilizers that automatically engage at lifting heights for maximum stability.
- Hard-chromed one-piece piston rod for durability.
- Tandem fork rollers, Ø 80x70 mm.

Application

For lifting pallets or loads to an ergonomic working height. Suitable for workshops, packing stations and logistics.

Type	WLL (kg)	Fork dimensions (mm)	Dimensions L × W × H (mm)	Width per fork (mm)	Lift height (mm)	Lift per stroke (mm)	Lowest height (mm)	Fork rollers configura-tion	Fork rollers diameter (mm)	Weight (kg)	Article number
PTH-M	1.000	1190 x 560	1600 x 560 x 1300	160	800	15	85	Enkel	80	108,0	**3401051**

PTH-E electric high lifter pallet truck



Electric high-lifter 60 cycles per charge

Combines the maneuverability of a pallet truck with the lifting height of a scissor lift table, equipped with an electro-hydraulic pump for effortless lifting. Can also be used manually if needed.

Features

- Compact design with ergonomic tiller arm.
- Stabilizers ensure safety and stability at maxi-mum lifting height.
- Hard-chromed one-piece piston rod.
- Simple operation via push-button controls.

Technical specifications

- Battery: 60 Ah / 12 V DC.
- Integrated charger: 6 A / 230 V AC input, 12 V DC output.
- Approx. 60 cycles per full charge.
- Can also be operated manually.

Application

Suitable for frequent use where loads must be raised to working height with minimal physical effort. Ideal for warehouses, assembly lines and logistics centers.

Type	WLL (kg)	Fork dimensions (mm)	Dimensions L × W × H (mm)	Width per fork (mm)	Lift height (mm)	Lift per stroke (mm)	Lowest height (mm)	Fork rollers configura-tion	Fork rollers diameter (mm)	Weight (kg)	Article number
PTH-E	1.000	1190 x 580	1600 x 580 x 1300	160	800	15	85	Enkel	80	141,0	**3401053**

HC skid lifter pallet truck combination



2-in-1: pallet truck + lifting table

Versatile pallet truck that can easily be converted into a lift table using the supplied platform plate. Offers ergonomic working height for handling goods.

Features

- Smooth lowering speed controlled by hand lever.
- Lifting with foldable foot pedal.
- Supplied with removable platform for lift table use.
- Fitted with ergonomic tiller.



Detachable lift-table platform

Application

Multipurpose solution: usable as a pallet truck for transport and as a lift table for ergonomic working height. Suitable for workshops, warehouses and production areas.

Type	WLL (kg)	Dimensions (mm)	Lift per stroke (mm)	Lowest height (mm)	Width per fork (mm)	Steering wheels material	Fork rollers material	Fork rollers configuration	Weight (kg)	Article number
HC-50	500	1115 x 530	20	85	160	Polyurethane	Polyurethane	Single	122,0	**3469001**
HC-100	1.000	1115 x 530	10	85	160	Polyurethane	Polyurethane	Single	150,0	**3469003**

RPHM pallet hook with manual balancing



Manual balancing, width & height adjustable forks

Manual balancing pallet hook designed for safe lifting of pallets using a crane or hoist. Equipped with adjustable suspension eye for manual balancing.

Features
- Width-adjustable forks.
- Adjustable height.
- Manual balancing via adjustable suspension eye.
- Supplied with chain box for securing sling chains during lifting.

Technical specifications
- No minimum load required for manual balancing.
- Fork lenght 1000 mm.

Application
For lifting pallets or loads to an ergonomic working height. Suitable for workshops, packing stations and logistics.



Chain box

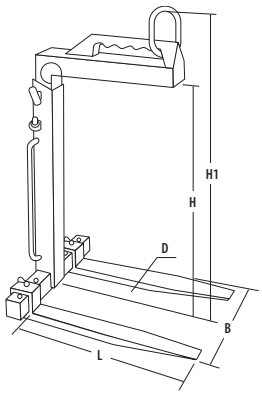

Type	WLL (kg)	B (mm)	D (mm)	H (mm)	H1 (mm)	Fork dimensions (L x D) (mm)	Diameter lifting eye (mm)	Weight (kg)	Article number
RPHM-1	1.000	350-900	100 x 30	1300-2000	1700-2400	1000 x 100 x 30	100 x 80	130,0	**3258010**
RPHM-2	2.000	400-900	120 x 40	1300-2000	1700-2400	1000 x 120 x 40	100 x 80	200,0	**3258020**
RPHM-3	3.000	450-900	120 x 50	1300-2000	1700-2400	1000 x 120 x 50	120 x 100	250,0	**3258030**
RPHM-5	5.000	530-1000	150 x 60	1300-2000	1700-2450	1000 x 150 x 60	136 x 120	370,0	**3258050**

RPHA pallet hook with automatic balancing



Self-balancing under load, width & height adjustable forks

Automatic balancing pallet hook fitted with gas spring to maintain load in a horizontal position without manual adjustment.

Features
- Width-adjustable forks.
- Adjustable height.
- Automatic balancing with integrated gas spring.
- Supplied with chain box for chains storing.

Technical specifications
- Minimum load 25% of WLL for automatic balancing.
- Fork lenght 1000 mm.

Application
Ideal for lifting pallets safely and efficiently with a crane, particularly when frequent lifting is required. Operator effort reduced due to automatic balancing.



Chain box

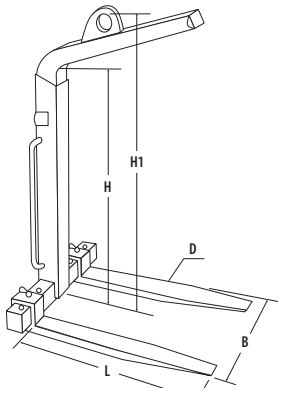

Type	WLL (kg)	B (mm)	D (mm)	H (mm)	H1 (mm)	Fork dimensions (L x D) (mm)	Diameter lifting eye (mm)	Weight (kg)	Article number
RPHA-1	1.000	350 - 900	100 x 30	1300-2000	1655-2355	1000 x 100 x 30	100 x 80	140,0	**3259010**
RPHA-2	2.000	400 - 900	120 x 40	1300-2000	1655-2355	1000 x 120 x 40	120 x 100	220,0	**3259020**
RPHA-3L	3.000	450 - 900	120 x 50	1300-2000	1720-2420	1000 x 120 x 50	135 x 115	280,0	**3259031**
RPHA-5	5.000	530 - 1000	150 x 60	1300-2000	1850-2650	1000 x 150 x 60	175 x 160	380,0	**3259050**

Rema SL winch stacker



Manual winch stacker with load-pressure brake for controlled lowering

Compact and user-friendly stacker for lifting and transporting pallets or goods up to medium lift heights. Operated by a robust hand winch, making it reliable and low-maintenance. Suitable for workshops, warehouses, and light industrial use.

Features
- Compact, low-maintenance design.
- Hand winch with automatic load pressure brake for safe operation.
- Steering wheels equipped with brake.
- Model 50B: adjustable fork width.
- Model 100B: fixed fork width.

Technical specifications
- Capacity: 500–1000 kg (depending on model).
- Lift height: up to 1500 mm.
- Steering wheels: nylon, with brake.
- Fork length: 1100 mm.

Options
- Choice between adjustable (50B) or fixed fork width (100B).

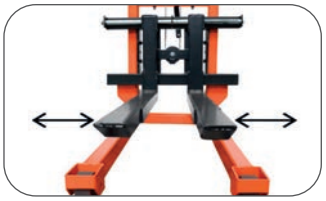

Adjustable forks

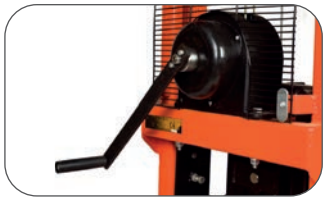

Hand winch with load-pressure brake

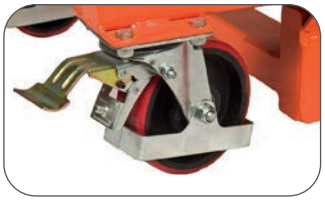

Steering wheel with brake

Type	WLL (kg)	Fork dimensions (mm)	Overall height (mm)	Overall width (mm)	Lift height (mm)	Lift per handle turn (mm)	Steering wheels material	Fork rollers material	Weight (kg)	Article number
SL-50B	500	1000x160/690	2030	160 - 690	90-1500	22	Polyurethane	Polyurethane	146,0	**3470101**
SL-100B	1.000	1150x540	1930	540	90-1500	9,5	Polyurethane	Polyurethane	182,0	**3470103**

Rema PU 10 pallet puller



Heavy-duty pallet puller with double scissor action and curved jaws for maximum grip. Suitable for pulling pallets across truck beds or warehouse floors when forklifts cannot reach.

Features
- Double scissor design for extra clamping force.
- Forged curved jaws grip pallet stringers securely.
- Durable steel construction.

Technical specifications
- Jaw opening: up to 760 mm.
- Chain length: 760 mm.

Type	WLL (kg)	Jaw opening (mm)	Length (mm)	Weight (kg)	Article number
PU10	2.200	90	760	9,5	**3260010**

Rema PU 20 pallet puller



Compact pallet puller with single scissor action and curved jaws. Lightweight design for quick repositioning of pallets.

Features
- Single scissor mechanism with forged curved jaws.
- Simple and robust construction.
- Easy to operate.

Technical specifications
- Jaw opening: up to 760 mm.
- Chain length: 760 mm.

Type	WLL (kg)	Jaw opening (mm)	Length (mm)	Weight (kg)	Article number
PU20	2.200	135	495	5,5	**3260020**

10



Introduction	250
Personal fall protection sets	252
Harnesses	253
Lanyards and connecting dev ces	257
Fall arrest dev ces	259
Accessories	261

Introduction to personal fall protection

Harnesses
For use wherever a fall hazard may occur.

Work-positioning belts
Use only for positioning work; not for fall arrest.

Important information

- Improper use can cause personal injury.
- Read the supplied instructions for your PPE carefully before use.
- Perform a visual inspection before each use.
- Under normal use, record these inspections at least once per year.
- Under intensive use, record inspections at least every 3 months.
- Recommended service life of lines/lanyards: up to 10 years from date of manufacture, depending on usage.
- Recommended service life of harnesses and devices: up to 10 years.
- Fall arrest devices must be inspected and certified only by the manufacturer or an authorised service centre.
- Do not use harnesses or lines after a fall, or if any damage is present.
- The dorsal D-ring (back attachment) and front textile attachment loops are only intended for connecting the lanyard.
- Front positioning D-rings on the (integrated) work-positioning belt may be used only where there is no risk of a fall (i.e., for positioning tasks).

Technical information

Harness characteristics

- Sizes: Standard and Large.
- Optimised fit; no pressure points.
- Comfortable to wear.
- Webbing width 45 mm (standard).
- Colour: signal red / blue.
- Declaration of Conformity per PPE Regulation 2016/425.
- User manual supplied.
- Inspection record card supplied for periodic inspections.

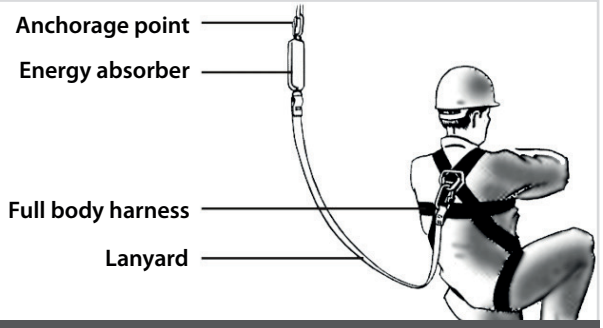

Harness with lanyard and energy absorber

For use where a fall hazard exists.
Maximum movement radius: under 2 m.

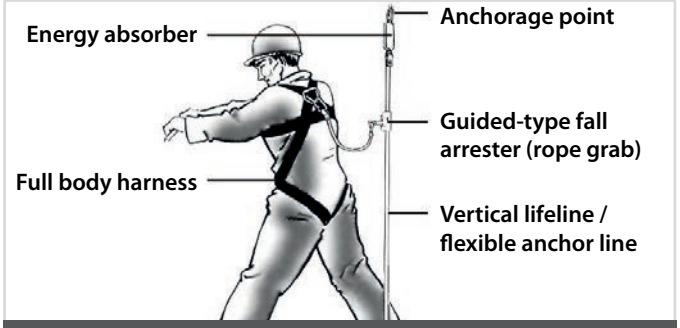

Harness with guided-type fall arrester on lifeline

For use where a fall hazard exists.
Larger movement radius required.

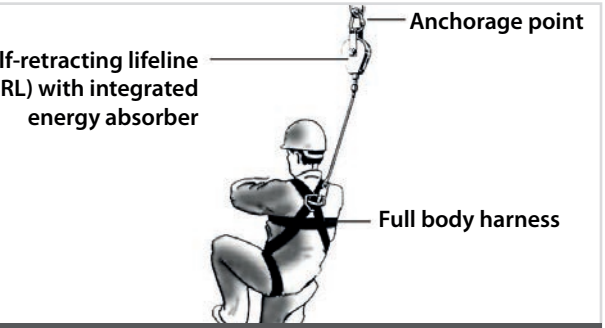

Harness with self-retracting lifeline (SRL)

For use where a fall hazard exists.
Larger movement radius and freedom of movement required.

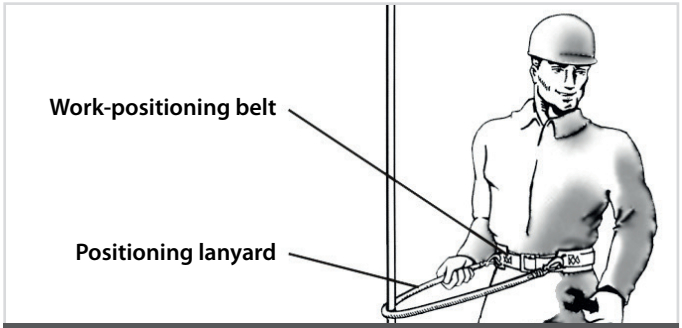

Work-positioning belt with lanyard

For positioning work only; not for fall arrest

Introduction Personal fall protection

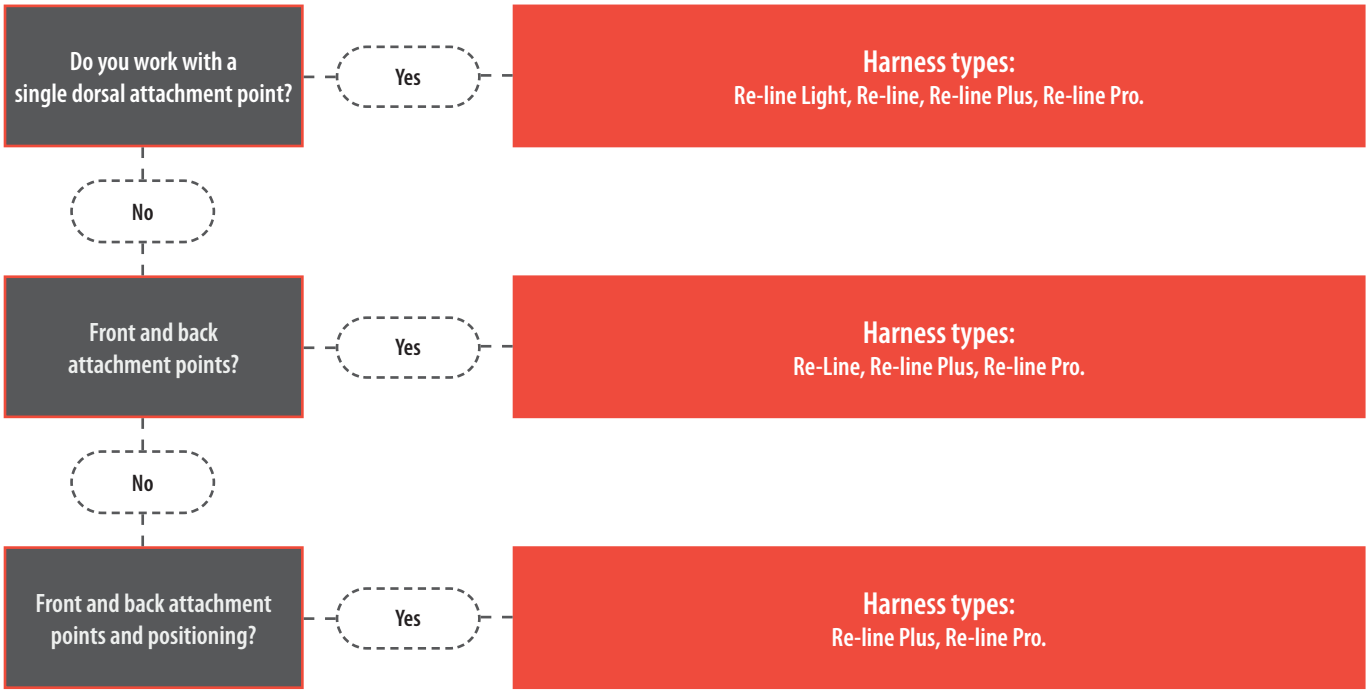

*** Positioning =** Working on a mast/structure with a positioning lanyard wrapped around the mast so both hands can be used. Only permitted when there is no fall risk, or when any potential fall distance is < 50 cm.

ⓘ Important

Use web energy absorbers/web lanyards only with a minimum required clearance of 6.75 m, measured from the anchorage point.

ⓘ Info

For trailing rope grabs, tie a stopper knot or attach a small weight to the end of the lifeline; this improves operation/engagement.

Selection chart - fall arrest devices and lanyards

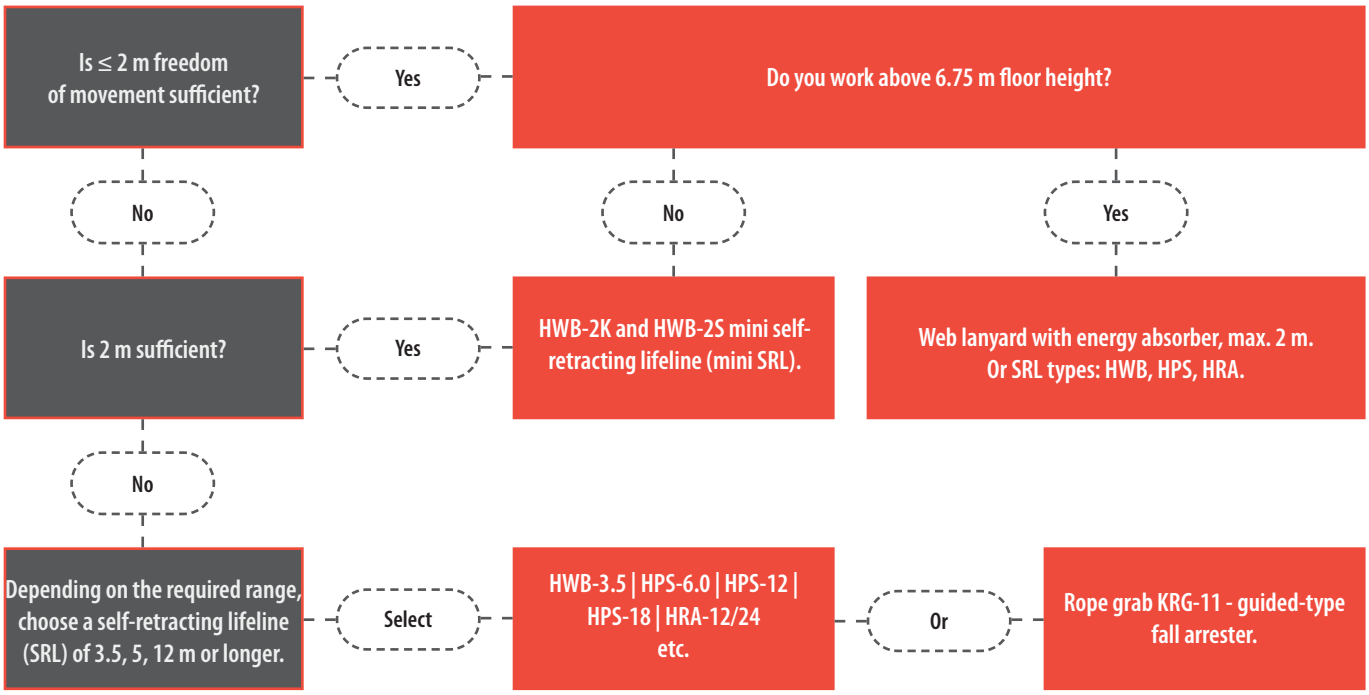

Rema Re-line harness + KPL 20 m kernmantle positioning rope + KRG11 rope grab (in Re-line backpack)



These safety sets comply with EN 363:2018 (personal fall protection systems) and are designed to arrest falls and limit impact forces.

Contents of the set
- Re-line harness (1720010)
- KPL kernmantle positioning rope 20 m (1726020)
- KRG11 guided-type fall arrester / rope grab (1725005)
- Re-line backpack (1731644)

Type	Article number
RE-LINE, 20 M KERNMANTLE ROPE, KRG IN RE-LINE BACKPACK	**1731210**

Rema Re-line Light harness and BVD1 energy absorber in Re-line backpack



These safety sets comply with EN 363:2018 (personal fall protection systems) and are designed to arrest falls and limit impact forces.

Contents of the set
- Light harness (1720022)
- BVD1 energy absorber (1723010)
- Re-line backpack (1731644)

Type	Article number
COMPLETE LIGHT, BVD1, IN RE-LINE BACKPACK	**1731222**

Rema Re-line Light harness and HWB 3.5 mini self-retracting lifeline in Re-line backpack



These safety sets comply with EN 363:2018 (personal fall protection systems) and are designed to arrest falls and limit impact forces.

Contents of the set
- Light harness (1720022)
- HWB mini (3.5 m) self-retracting lifeline (1790101)
- Re-line backpack (1731644)

Type	Article number
COMPLETE MINI FALL-ARREST SET IN RE-LINE BACKPACK	**1731230**

Rema Re-line harness and HPS12 self-retracting lifeline in Re-line backpack



These safety sets comply with EN 363:2018 (personal fall protection systems) and are designed to arrest falls and limit impact forces.

Contents of the set
- Re-line harness (1720010)
- HPS12 self-retracting lifeline (1720205)
- Re-line backpack (1731644)

Type	Article number
COMPLETE FALL-ARREST SET IN RE-LINE BACKPACK	**1731240**

Rema Re-line Light harness



Ultra-lightweight harness made from upcycled PET bottles

Basic lightweight fall-arrest harness with high-quality buckles and with higher capacity than standard models.

Features

- Made from recycled material.
- Steel D-rings at the back for anchorage.
- User capacity up to 140 kg.
- Rear fall indicators show if the harness has been subjected to a shock (fall).
- Equipped with high-frequency RFID tag MIFARE Ultralight EV1, 13.56 MHz (Ø 25 mm).

Characteristics

- Weight 0.9 kg.
- Hand-washable up to 40 °C.
- With RFID chip (HF 13.56 MHz).
- Easy size adjustment.
- Sizes M (Standard) and L (Large) available.
- Made from upcycled PET bottles.
- Dimensions for both sizes: 74 cm measured from the seat area to the end of the leg.

- **Marking**: According to standard, CE.
- **Temperature range**: -35°C up to +50°C.

Type	Size	Max. load (kg)	Chest circumference (cm)	Waist circumference (cm)	Thigh circumference (cm)	Hip circumference (cm)	Weight (kg)	Article number
Re-Line LIGHT	Standard	140	107 - 127	91 - 112	74	112 - 132	0,9	**1720022**
Re-Line LIGHT	Large	140	127 - 137	112 - 122	74	132 - 142	0,9	**1720023**

Rema Re-line harness



Fall protection made from upcycled PET bottles

Front & back attachment
Quick-release buckles
Shoulder padding

All-round harness for fall protection. Light and comfortable with higher capacity than standard models. Well designed with soft shoulder padding. Fast to put on and adjust thanks to high-quality quick-release buckles at chest and leg positions.

Features

- Made from recycled material.
- Steel D-rings at the front and back for anchorage.
- Quick-release buckles with colour indicator showing the buckle is safely locked.
- The maximum load of 140 kg allows a higher user weight compared with standard harnesses.
- Fitted with soft sholder padding.
- Rear fall indicators show if the harness has been exposed to shock (fall).
- Equipped with high-frequency RFID tag MIFARE Ultralight EV1, 13.56 MHz RFID NFC chip, Ø 25 mm.

Characteristics

- Weight 1.3 kg.
- Hand-washable up to 40 °C.
- With RFID chip (HF 13.56 MHz).
- Easy to tighten/loosen (size adjustment).
- Sizes M (Standard) and L (Large) available.
- Made from upcycled PET bottles.
- Dimensions for both sizes: 74 cm measured from the seat area to the end of the leg.

- **Marking**: According to standard, CE..
- **Temperature range**: –35 °C to +50 °C.

Type	Size	Max. load (kg)	Chest circumference (cm)	Waist circumference (cm)	Thigh circumference (cm)	Hip circumference (cm)	Weight (kg)	Article number
Re-Line	Standard	140	107 - 127	91 - 112	74	112 - 132	1,3	1720010
Re-Line	Large	140	127 - 137	112 - 122	74	132 - 142	1,3	1720012

Rema Re-line Plus harness



Work positioning + fall protection made from upcycled PET bottles

Front & back attachment
Quick-release buckles
Shoulder padding
Padded hip belt
Work positioning belt
Tool loops

This fall protection harness is comfortable and well designed with high-quality buckles for quick and safe use. It has a higher capacity than standard models and is approved for fall protection as well as work positioning. It is fitted with soft shoulder padding and a padded hip belt with tool holders at the back.

Features

- Made from recycled material.
- Steel D-rings at the front and back for anchorage.
- Work positioning belt and D rings at the sides.
- Fitted witn tool loops.
- Quick-release buckles with colour indicator showing the buckle is safely locked.
- Maximum load 140 kg allows a higher user weight compared with standard harnesses.
- Fitted with soft shoulder padding and a padded hip belt.
- Rear fall indicators show if the harness has been subjected to a shock (fall).
- Equipped with high-frequency RFID tag MIFARE Ultralight EV1, 13.56 MHz RFID NFC chip, Ø 25 mm.

Characteristics

- Weight 2.2 kg.
- Hand-washable up to 40 °C.
- With RFID chip (HF 13.56 MHz).
- Easy to tighten/loosen (size adjustment).
- Sizes M (Standard) and L (Large) available.
- Made from upcycled PET bottles.
- Dimensions for both sizes: 74 cm measured from the seat area to the end of the leg.

- **Marking**: According to standard, CE.
- **Temperature range**: –35 °C to +50 °C.

Type	Size	Max. load (kg)	Chest circumference (cm)	Waist circumference (cm)	Thigh circumference (cm)	Hip circumference (cm)	Weight (kg)	Article number
Re-Line PLUS	Standard	140	107 - 127	76 - 111	74	112 - 132	2,2	**1720014**
Re-Line PLUS	Large	140	127 - 137	91 - 126	74	112 - 132	2,2	**1720015**

Rema Re-line Pro harness



Rope access + work positioning + fall protection made from upcycled PET bottles

Front & back attachment
Quick-release buckles
Shoulder padding
Padded hip belt
Leg padding
Work positioning D rings
Tool loops
Greater freedom of movement

Most comfirtable and versitile fall-protection harness with high-quality buckles for quick and safe use and with with higher capacity than standard models. Approved for work positioning as well as rope access. Fitted with soft shoulder padding, a padded hip belt and leg padding. Thanks to the unique strap design, the shoulder straps follow the user's movements creating great freedom of movement.

Features

- Made from recycled material.
- Steel D-rings at the front, back and side for anchorage.
- Foldable and adjsutable steel D rings at the sides for work positioning.
- Fitted with tool loops.
- Quick-release buckles with colour indicator showing the buckle is safely locked.
- Maximum load 140 kg allows a higher user weight compared with standard harnesses.
- Fitted with soft shoulder padding, a padded hip belt and leg padding.
- Rear fall indicators show if the harness has been subjected to a shock (fall).
- Equipped with high-frequency RFID tag MIFARE Ultralight EV1, 13.56 MHz RFID NFC chip, Ø 25 mm.

Characteristics

- Weight 2.1 kg.
- Hand-washable up to 40 °C.
- With RFID chip (HF 13.56 MHz).
- Easy to tighten/loosen (size adjustment).
- Sizes M (Standard) and L (Large) available.
- Made from upcycled PET bottles.
- Dimensions for both sizes: 74 cm measured from the seat area to the end of the leg.

- **Marking**: According to standard, CE.
- **Temperature range**: -35°C up to +50°C.

Type	Size	Max. load (kg)	Chest circumference (cm)	Waist circumference (cm)	Thigh circumference (cm)	Hip circumference (cm)	Weight (kg)	Article number
Re-Line PRO	Standard	140	91 - 127	76 - 111	74	96 - 132	2,1	**1720016**
Re-Line PRO	Large	140	117 - 147	102 - 132	74	122 - 152	2,1	**1720017**

Rema BVD1 and BVD2 energy-absorbing web lanyards



High-quality web lanyards with shock absorber. These lanyards are used when the worker operates from a static position, connected to a fixed anchorage point.

The shock-absorbing pack is activated in the event of a fall, limiting the impact force on the user.

These web lanyards must be used together with a safety harness.

Features
- Length 1.4 m.
- Max. load 140 kg.
- Fitted with RFID/NFC Ø 25 mm.



Type	Length (m)	Article number
BVD1	1,4	**1723010**
BVD2	1,4	**1723012**

Rema RL webbing lanyard



Durable 26 mm webbing lanyard with two sewn loops for connecting harness, hardware and anchorage.

Features
- 26 mm webbing with two loops.
- To be used with connecting hardware 1725001 and 1725002.
- Tested to EN 354:2010.

Type	Length (m)	Article number
WEB LANYARD 1.3 MTR	1,3	**1724010**
WEB LANYARD 1.5 MTR	1,5	**1724013**
WEB LANYARD 1.8 MTR	1,8	**1724018**

Rema SFA 25 mm endless anchor strap



0,8 m

This range of anchor straps is a handy aid for creating a temporary anchorage.

The strap can be wrapped around an object to make a temporary anchor point where a scaffold hook cannot be attached. Suitable for repeated use.

Features
- 25 mm webbing, endless.
- To be used with connecting hardware 1725001 and 1725002.

Type	Length (m)	Article number
SFA 25mm 0,8m	0,8	**1722008**
SFA 25mm 1,2m	1,2	**1722012**
SFA 25mm 1.5m	1,5	**1722015**
SFA 25mm 2m	2,0	**1722020**

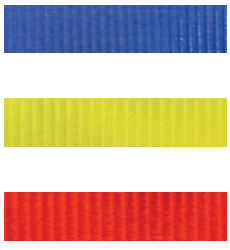

1,2 m

1,5 m

2 m

MAS shock absorber



Compact shock-absorbing web lanyard that limits arrest forces on the user in the event of a fall. One end with D-ring, the other with karabiner. Packed dust- and water-protected. Must be used together with a safety harness.

Features
- Typical lanyard length: 1.5 m (as per variant table).
- Max. user 140 kg (as per page).
- Shock-pack activates on fall and reduces impact force.

IMPORTANT!
- Required clearance incl. lanyard/absorber **min. 6.75 m from anchorage**.

Type	Length (m)	Article number
MAS BFD1	0,5	**1730191**

Rema RLW webbing tie-back 26 mm



1721012 1721015 1721020

Polyester 26 mm webbing lanyard with a karabiner at one end and a loop at the other; plus a separate intermediate fitting. Designed for tying back around structures when no direct hook-on point is available.

Features
- Polyester webbing 26 mm fitted with a karabiner at one end and a loop at the other, with connecting fittings.
- 1 large and 1 small hook (1721012).
- Adjustable by buckle from 1.4 to 2.0 m (1721020).
- 1 small hook and 1 loop, 1.5 m (1721015).

Type	Length (m)	Article number
RLW 14mm-LUS-LM-1.5m	1,5	**1721015**
RLW 14mm-LUS-LM-1.4/2.0m	1,4 - 2,0	**1721020**
RLW 14mm-EH60-LM-1.2m	1,2	**1721012**

KRG11 guided-type fall arrester (rope grab)







Safety lock

Designed to provide vertical fall protection for users climbing or descending a ladder or structure. This KRG11 version is intended only for use with an 11 mm kernmantle rope.

When used, the KRG11 is connected directly to the chest attachment of a compatible harness via a karabiner hook. This keeps the user close to the structure; in the event of a slip, fall distance and load on the top anchor are minimised for the user.

Features
- Guided-type fall arrester that travels on the lifeline and serves as a fall-arrest device.
- Moves freely during work and locks automatically in the event of a fall.
- Suitable for 11 mm kernmantle lifeline.

Application
- Construction trades such as roofers, carpenters, façade/cladding installers, etc.

IMPORTANT!
- At height, always use backup fall protection when (dis)connecting the device.

Type	Weight (g)	Article number
KRG11 guided-type fall arrester	10,0	**1725005**

KPL 11 mm kernmantle positioning line



11 mm kernmantle rope for vertical or near-vertical work. Static rope with very low stretch, high wear resistance and long service life. Suitable for rope access and work positioning; also usable for rescue, façade work, expeditions and caving.

Features

- The lifeline is connected to the harness using a guided-type fall arrester (KRG11).

Standard levering

- One sewn eye.

Type	Diameter (mm)	Length (m)	Article number
KPL-10	11	10	**1726010**
KPL-20	11	20	**1726020**
KPL-30	11	30	**1726030**

HWB mini self-retracting lifeline



HWB-2S



HWB-2K
HWB-3.5

Compact SRL that automatically pays out and retracts; the system locks in the event of a fall.

Features

- Integrated energy absorber.
- Swivel top attachment.
- Low own weight.
- Rated 136 kg.
- Aluminium housing.
- Supplied without karabiner.

Type	Length (m)	Weight (kg)	Article number
HWB - 2K	2,0	1,00	**1790103**
HWB - 2S	2,0	1,45	**1790105**
HWB - 3,5	3,5	1,60	**1790101**

HWPS self-retracting lifeline



Robust, lightweight SRL with steel cable, internal energy absorption and fall indicator.

Features

- Low-maintenance plastic housing (also available in aluminium).
- Galvanized steel cable with swivel top attachment and swivel hook to prevent twisting.
- Sharp-edge tested (r ≥ 0.5 mm).
- Suitable for vertical and horizontal use.
- Minimum clearance 4.0 m.
- Rated 136 kg.

Type	Users	Length (m)	Weight (kg)	Article number
HWPS-3	1	3	1,9	**1790121**
HWPS-6	1	6	2,5	**1790125**
HWPS-9	1	9	3,2	**1790127**
HWPS-12	1	12	4,7	**1790129**
HWPS-18	1	18	6,3	**1790131**

ACB-1.8 fall-arrest block for MEWPs (aerial work platform)



Fall-arrest device widely used when working from an aerial work platform. Robust yet very light.

Features

- Aluminium housing (robust, very light).
- Dyneema webbing, edge-tested.
- Supplied without karabiner.
- Integrated energy absorber limits arrest forces.
- Swivel top eye prevents web twist.
- Usable in many situations without extra gear.
- Edge-tested via 2 × 90° edge (R ≥ 0.13 mm).
- Rated load 136 kg.

Type	Length (m)	Weight (kg)	Article number
ACB-1.8	1,8	0,96	**1790107**

HPS self-retracting lifeline



Cable retracts automatically to keep a constant tight connection; locks even at fall speeds > 1.5 m/s, minimising required clearance.

Features

- 5 mm steel cable lifeline.
- Integrated energy absorber.
- Standard plastic housing (aluminium available).
- Optimal freedom of movement.
- Rated load 136 kg.

Type	Steel cable length (m)	Weight (kg)	Article number
HPS - 6.0	6	3,0	**1790203**
HPS -12.0	12	4,6	**1790205**

HRA SRL with rescue winch



In case of a fall, the built-in rescue winch allows the user to be raised or lowered quickly and safely.

Features

- 5 mm steel cable lifeline.
- Integrated energy absorber.
- Aluminium housing available (cable lengths up to 60 m).
- Rated load 136 kg.

Type	Steel cable length (m)	Weight (kg)	Article number
HRA-12.0	12	7,0	**1790301**
HRA -24.0	24	16,0	**1790307**

Aluminium tripod (excl. fall arrester / winch)



Aluminium tripod that serves as an anchorage point. In combination with a winch and/or fall-arrest device it allows controlled lowering and, in emergencies, fast rescue/raising.

Features
- Adjustable legs to compensate for uneven ground.
- Capacity: max. 2 persons.
- Supplied as standard with a mounting plate for a fall-arrest block.

Application
- Work in silos, tanks, reservoirs, manholes and similar confined spaces.

Options
- Mounting plate (for devices).
- Personnel & material winch.
- HRA fall-arrest device with rescue.

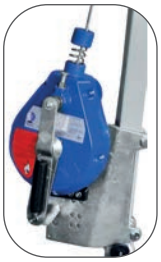

Optional fall-arrest device



Optional personnel & material winch

Confined-space tripod for rescue, entry & retrieval

Adjustable legs for uneven ground, max. 2 users

Type	WLL (kg)	Span (mm)	Span (mm)	Weight (kg)	Article number
IK2 / A-300	300	645 - 2207	1480 - 2554	24,0	**1790402**
Mounting plate 41–54W for winch	-	-	-	1,7	**1790511**
Option: IKLW-300 kg lastlier	300	-	-	11,5	**1790510**
Option: PLW-300 personnel & load winch	300	-	-	16,2	**1790509**

Connecting hardware



O-screw karabiner



Twist-lock karabiner



Self-closing scaffold hook

Compact connectors for linking lanyards, anchor slings and fixed anchorage points. Choose the gate style/opening to suit the job.

Type	Article number
O-screw karabiner 17mm 23kN	**1725001**
Twist-lock karabiner 22mm 24kN aluminium	**1725002**
Self-closing scaffold hook 60mm 23kN	**1725004**

Storage systems



Rugged PPE backpack for a complete fall-protection kit. Offers room for a full-body harness plus a lanyard with energy absorber or a compact SRL. Keeps equipment organised and protected during transport and storage.

Features
- Durable construction with secure closures.
- Helps keep PPE clean, dry, and ready for use.

Type	Dimensions (mm)	Article number
System backpack	290 x170 x 420	**1731644**

EAP travelling trolley



Mobile anchorage point for fall-protection systems. Can be mounted on various I-beam profiles and moved along the beam.

Features

- Rack and wheel brackets made of aluminium.
- Suspension eye of high-grade steel alloy.
- Ball-bearing wheels.
- Adjustable for different flange widths.
- Max. load 140 kg.
- Tested to EN 795-B.

Type	Adjustment range (mm)	Weight (kg)	Article number
EAP trolley	63.5 - 305	3,0	**1731801**

EAP clamp



Fixed anchorage point for fall-protection systems. Mounts directly onto various I-beam profiles.

Features

- Rack and jaw plates in aluminium.
- Suspension eye in high-grade steel alloy.
- Adjustable to different flange widths.
- Max. load 140 kg.
- Tested to EN 795-B.

Type	Adjustment range (mm)	Weight (kg)	Article number
EAP clamp	63,5 - 305	2,54	**1731803**

11



Cable load limiter	264
Gantry cranes	265
Davit crane 125 - 500 kg	268
Aluminium tripods	269
Cable trolley (festoon) installation information	270
Rails and components	271

HF cable load limiter



Integrated microswitch: overload protection shut-off

The deflection of the cable caused by the sensor generates a tangential force proportional to the force applied to the traction cable. In the event of overload, an integrated microswitch in the sensor is actuated, stopping the electric wire-rope hoist.

Technical specifications

- Standard version: for cables from 4 to 35 mm.
- Sensor: integrated microswitch.
- Installation: directly on the dead end (fixed part).
- Sensor material: aerospace-grade aluminium.
- Surface finish: clear anodised.
- Calibration system: via micrometric screw.
- Switching voltage: max. 220 VAC.
- Switching current: max. 5 A.
- Accuracy: 5% of full scale (FS).
- Operating temperature: from -30°C to +80°C.
- Protection rating: IP40.
- Maintenance: none.
- Connection: 3-core power cable.
- Electrical output: plug (socket/connector).
- Cable length: 2 m, optional 5 m.

Application

- This overload protection device is specifically designed for overhead cranes with multiple falls (reeving).

Option

- IP65.

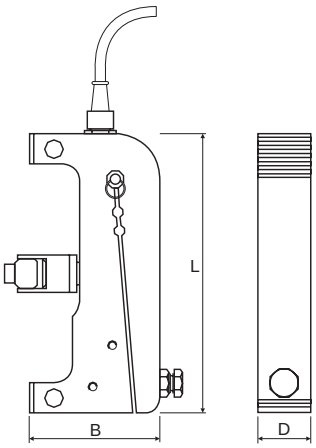

Checklist for requesting an overload protection device.

- ☐ Crane capacity.
- ☐ Number of falls (reeving): minimum 2.
- ☐ Cable diameter.
- ☐ Power supply system yes/no.
- ☐ Option IP65, standard IP40.

Type	WLL (kg)	Cable diameter (mm)	B (mm)	D (mm)	L (mm)	Weight (kg)	Article number
HF-0A	150 - 1.600	4 - 10	59	28	120	0,40	**4498000**
HF-1A	250 - 3.200	5 - 16	70	40	150	0,85	**4498001**
HF-2A	500 - 7.000	17 - 25	98	50	200	2,00	**4498002**
HF-3A	1.000 - 1.200	24 - 35	138	60	280	5,00	**4498003**

PKVA fixed gantry crane



1.000 - 3.200 kg

Demountable design, easy to move when unloaded

Custom RAL colour (option)

The Rema PKVA mobile gantry cranes are ideal for changing tools on machines, or as an aid during repairs and replacement of parts, machines and pumps.

Features
- Demountable in 5 parts.
- PKVA-5.0 demountable in 3 parts.
- Uprights made from robust square tube profile.
- Very easy to move when unloaded; not movable when loaded.

Standard delivery
- 2 braked wheels and 2 unbraked wheels.

Options
- Power supply system.
- Hot-dip galvanised.
- Blast-clean and paint in the desired RAL colour.
- Crane logbook.



5.000 kg

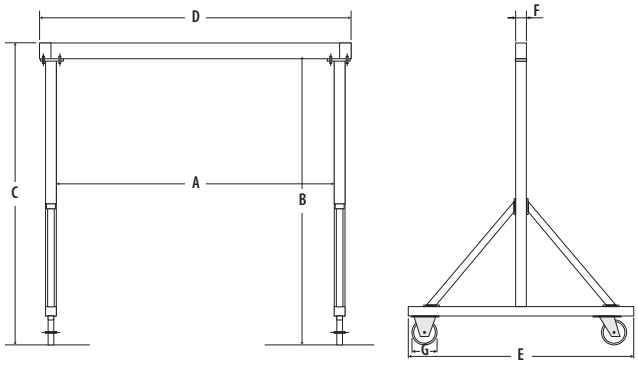

Type	WLL (kg)	A (mm)	B (mm)	C (mm)	D (mm)	E (mm)	F (mm)	G (mm)	Weight (kg)	Article number
PKVA-1.0	1.000	3500	3500	3700	3870	2240	100	200	425,0	**3950001**
PKVA-2.0	2.000	3500	3500	3740	3960	2240	120	200	480,0	**3950003**
PKVA-3.2	3.200	3500	3500	3800	3990	2240	150	250	540,0	**3950005**
PKVA-5.0	5.000	3500	3500	3800	5020	2240	150	300	630,0	**3950007**

PKA aluminium gantry crane



1500 kg version



3000 kg version

The Rema PKA gantry cranes are ideal for changing tools on machines, or as an aid during repairs and replacement of parts, machines and pumps.

Features
- Very short assembly and disassembly time (a few minutes).
- Demountable in 3 parts: two uprights and one beam.
- Folding uprights for easy transport.
- Height adjustment; installation in low-headroom areas is possible.
- Adjustable span via one adjustable upright.
- Very low self-weight because the crane is made entirely of aluminium and plastic.

Application
- When a non-permanent lifting point needs to be created quickly and easily.

Standard delivery
- Including trolley.
- Excluding hoist.

Options
- Wall bracket for 1 side. Mobile version (unloaded). Other versions on request.
- Winch for height adjustment.



Winch for height adjustment



Foldable design





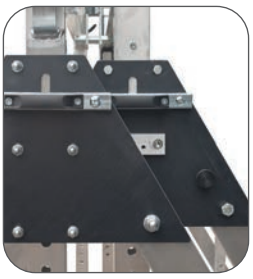

3.000 kg reinforced (double) version

Type	WLL (kg)	Height (mm)	Upright width (mm)	Span (mm)	Weight (kg)	Article number
PKA-K-2	1.500	1180 - 2100	1200	2000	98,0	**3940008**
PKA-K-3	1.500	1180 - 2100	1200	3000	105,0	**3940000**
PKA-K-4	1.500	1180 - 2100	1200	4000	115,0	**3940001**
PKA-M-2	1.500	1680 - 3000	1710	2000	111,0	**3940009**
PKA-M-3	1.500	1680 - 3000	1710	3000	121,0	**3940002**
PKA-M-4	1.500	1680 - 3000	1710	4000	130,0	**3940003**
PKA-M-5	1.500	1680 - 3000	1710	5000	140,0	**3940007**
PKA-G-2	1.500	2230 - 4000	2290	2000	127,0	**3940010**
PKA-G-3	1.500	2230 - 4000	2290	3000	138,0	**3940004**
PKA-G-4	1.500	2230 - 4000	2290	4000	146,0	**3940005**
PKA-G-5	1.500	2230 - 4000	2290	5000	156,0	**3940006**

PKAV aluminium gantry crane (mobile)



PKAV mobile gantry cranes, when a non-permanent lifting point needs to be created quickly and easily.

Features
- Mobile under load.
- Very short assembly and disassembly time.
- Demountable in 3 parts: two uprights and one beam.
- Height adjustment; installation in low-headroom areas is possible.
- Adjustable span via one adjustable upright.
- Very low self-weight because the crane is made entirely of aluminium and plastic.

Standard delivery
- Including trolley.
- Excluding hoist.

Options
- Other versions on request.

Type	WLL (kg)	Height (mm)	Upright width (mm)	Span (mm)	Weight (kg)	Article number
PKAV-K-3M	1.000	1500-2000	1250	3000	127,0	**3943001**
PKAV-K-4M	1.000	1500-2000	1250	4000	136,0	**3943003**
PKAV-M-3M	1.000	2000-3000	1700	3000	149,0	**3943005**
PKAV-M-4M	1.000	2000-3000	1700	4000	158,0	**3943007**
PKAV-M-5M	1.000	2000-3000	1700	5000	168,0	**3943008**
PKAV-G-3M	1.000	2250-3500	2000	3000	159,0	**3943009**
PKAV-G-4M	1.000	2250-3500	2000	4000	168,0	**3943011**
PKAV-G-5M	1.000	2250-3500	2000	5000	178,0	**3943013**

Swivelling davit crane



Integrated winch: controlled lifting & secure hold

Load brake: holds the load securely in any position

A highly user-friendly freestanding davit crane. Lightweight and easy to carry. Ready for use within seconds. The integrated winch and cable provide an ergonomic, modern design.

Features

- Robust and safe davit crane in accordance with EN 13157.
- Ready for use within seconds.
- Integrated winch and cable in an ergonomic, modern design.
- Easy to transport.
- Load brake with double pawl system to hold the load safely and securely in any position.
- 360° load rotation possible via roller bearings.
- Adjustable jib with ergonomic grip.
- Maintenance-free.
- Supplied with 8 m steel cable (Ø 5 mm) including hook.
- Paint thickness 60–80 micron, 1 coat, to DIN/ISO 12944, C1-M, RAL 7035 (light grey).
- Corrosion-resistant.

Options

- Electro-galvanised finish (6–8 micron) (EV).
- Stainless steel 316 (complete).
- ATEX certified for zone 2 and 22 (EX).
- CE II 3G Ex IIC T4 Gc, -20°C < Tamb < +70°C.
- CE II 3D Ex IIIC T135°C Dc, -20°C < Tamb < +70°C.
- Custom options available.

Accessories

- Floor socket (surface-mounted), wall socket and cast-in concrete floor socket.
- Carry bag and rain cover.

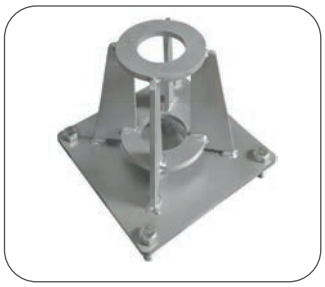

Floor socket



Floor socket mounting

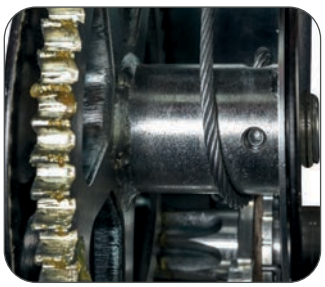

Integrated winch and cable

Type	WLL (kg)	Leg length min/max (mm)	Height (mm)	Usable cable length (m)	Lifting height per crank revolution (mm)	Handle force (kg)	Weight (kg)	Article number
SD125	125	125	4	18	20	10	30,0	**3750125**
SD250	250	250	4	18	20	10	30,0	**3750250**
SD500	500	268	5	13	20	10	30,0	**3750500**

D aluminium tripod and DW aluminium tripod with winch



Variant D
with optional flat base plate

Rema aluminium tripods are very lightweight and easy to transport in any car boot/trunk thanks to the telescopic (sliding) legs—ideal for on-site use.

Variant D
Supplied with suspension eye, height adjustment and pointed legs.

Variant DW
Supplied with galvanised winch with load brake, complete with steel wire rope and swivel load hook, plus height adjustment and pointed legs.

Features
- Lightweight aluminium construction.
- Easy to transport thanks to the telescopic design.
- Supplied as standard with pointed legs.
- D-version supplied with a swivel suspension point.

Options
- Steel tripods on request.
- 3050025 base plates with anti-slip for solid floors.
- 3050026 chain securing for smooth floors.
- Hoists.



Variant DW
winch included as standard



Pointed foot (standard)

Option



Flat base plate

Option



Chain securing

Type	WLL (kg)	Leg length min/max (mm)	Height (mm)	Spread (mm)	Lifting height (m)	Weight (kg)	Article number
D-250	250	1180 - 1880	940 - 1580	940 - 1500	-	10,0	**3050001**
D-500	500	1500 - 2500	1150 - 2050	1200 - 1950	-	17,0	**3050005**
D-503	500	1760 - 3000	1450 - 2630	1430 - 2390	-	20,0	**3050002**
D-1.000	1.000	1780 - 3000	1380 - 2540	1650 - 2350	-	27,0	**3050004**
D-1.004	1.000	2250 - 4000	1860 - 3440	1790 - 3070	-	36,0	**3050006**
DW-200	200	1180 - 1880	940 - 1580	950 - 1500	5	20,0	**3050003**
DW-500	500	2100 - 2500	1700 -2100	1500 - 2000	5	35,0	**3050007**
DW-530	500	2400 - 3000	2000 - 2400	1900 - 2500	7	45,0	**3050009**
DW-1.000	1.000	2400 - 3000	1900 - 2400	1900 - 2500	7	45,0	**3050011**
DW-1.040*	1.000	2850 - 4000	2400 - 3400	2200 - 3000	7	69,0	**3050013**

Height at maximum spread (25°).
Upper section of the leg made of galvanised steel.

Information - Cable trolley (festoon) installation

A simple and economical solution for mobile power supply for crane and transport installations, hoists, electric tools, machines, etc.

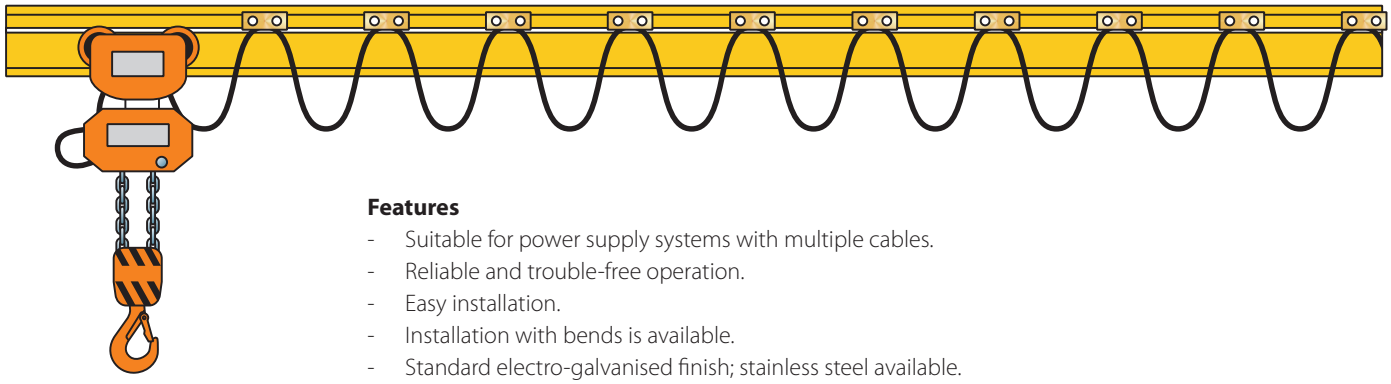

Features

- Suitable for power supply systems with multiple cables.
- Reliable and trouble-free operation.
- Easy installation.
- Installation with bends is available.
- Standard electro-galvanised finish; stainless steel available.
- Easy to extend/expand.
- Virtually maintenance-free.

A complete installation consists of:

A | Rail sections

Use Table 1 to determine the correct profile size.
Total track length = travel length of the powered unit (e.g., crane or hoist) + required overrun length, calculated from the width of the cable trolleys when stacked together + 15% (**see Figure 1**).

B | Connector sleeves

To determine the quantity = number of rail sections minus 1.

Example: Rail length = 12 m Number of rails = 4 (4x3m)
4 (-1) = **3 connector sleeves**

C | Mounting clamps

Determine the number of ceiling or wall mounting clamps:

- Runway/support spacing: 1–2 m.
- Warehouse/support spacing: 0.5–1 m.

D | Cable trolleys

Quantity is determined by the cable sag: multiply the sag by 2 and divide the total rail length by this value.

Example: Rail length = 12 m. Sag = 0.6 m.
12 : (2 x 0.6) = 12:1.2 = 10 pcs incl. towing trolley

E | Towing trolley

- **1 per installation**

F | Start clamp

- **1 per installation**

G | End stop

- **1 per installation**

Figure 1

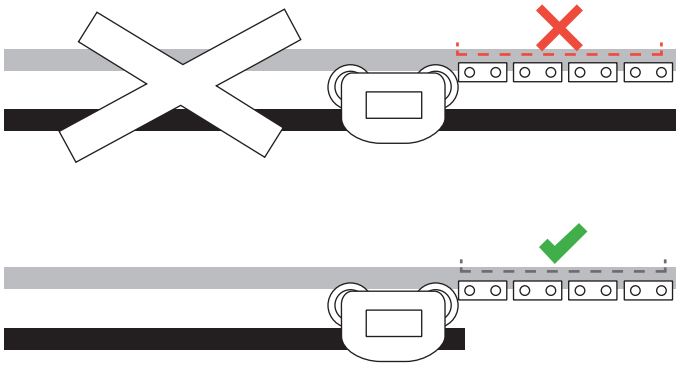

Table 1

Table for selecting the correct rail profile:

Profile	Round cable diameter (mm)					WLL cable trolley (kg)
	8 - 15	16 - 24	25 - 32	33 - 43	44 - 60	
PR400						50
PR300						30
PR100						10

Runway rail (C-rail)

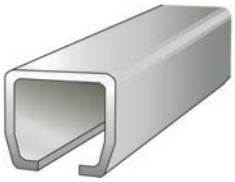

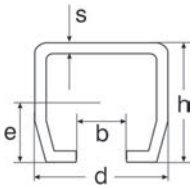

The standard length of the runway rail is approx. 6 m for each profile number. Orders of less than 18 m are supplied in 3 m lengths to prevent transport damage. Please remember to order the rail connectors as well.

Options

- Curved rail sections on request. Radius from 610 mm up to 3000 mm.

Type	B (mm)	D (mm)	E (mm)	H (mm)	S (mm)	Load capacity per metre (kg)	Weight (kg/st/m)	Article number
PR100	8	30,0	15,8	28,0	1,75	80	1,3	**4001001**
PR300	11	40,0	19,8	35,0	2,75	100	2,5	**4001003**
PR400	15	48,5	24,8	43,5	3,20	200	3,8	**4001005**

Rail connector sleeves

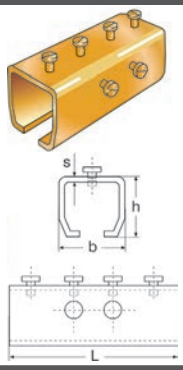

Type	B (mm)	H (mm)	L (mm)	S (mm)	Weight (kg/st/m)	Article number
1103	38	36	85	3,0	0,3	**4003001**
1303	50	45	120	4,0	0,6	**4003003**
1403	60	54	150	4,5	1,0	**4003005**

Wall mounting clamps

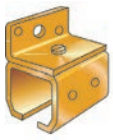

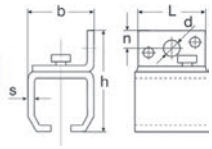

Type	B (mm)	D (mm)	H (mm)	L (mm)	N (mm)	S (mm)	Weight (kg/st/m)	Article number
101	38	8	60	40	10,0	3,0	0,15	**4005001**
301	50	11	76	55	13,0	4,0	0,35	**4005003**
401	60	13	94	68	16,5	4,5	0,50	**4005005**

Ceiling mounting clamps

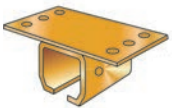

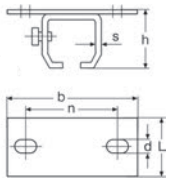

Type	B (mm)	D (mm)	H (mm)	L (mm)	N (mm)	S (mm)	Weight (kg/st/m)	Article number
102	90	8	39	40	63 ± 3,5	3	0,20	**4007001**
302	115	11	50	55	80 ± 4,0	4	0,35	**4007003**
402	130	13	59	60	94 ± 4,0	4,5	0,50	**4007005**

C-rail support brackets



Includes 2 splice plates.

Type	Length (mm)	For rail profile	Article number
PR100-60CM	600	1,1	**4038003**
PR100-150CM	1500	1,9	**4038004**

Rail end stops

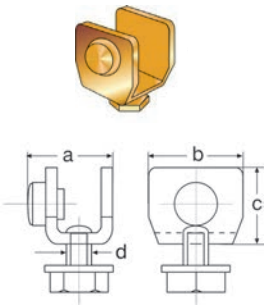

Type	For rail profile	A (mm)	B (mm)	C (mm)	D (mm)	Weight (kg/pc/m)	Article number
100P	100	25	26	23	M8	0,05	**4009001**
300P	300	30	32	27	M10	0.09	**4009003**
400P	400	35	39	34	M10	0.12	**4009005**

Flat cable trolleys

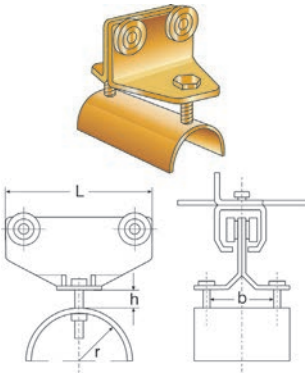

All cable trolleys are fitted with dust- and water-resistant running wheels. Buffers on both sides.

Type 157 is supplied with plastic wheels.

Type	B (mm)	H (mm)	L (mm)	R (mm)	Cable clamp (mm)	Weight (kg/st/m)	Article number
157*	55	20	95	25	55 x 20	0,3	**4011001**
137	55	20	95	25	55 x 20	0,4	**4012001**
337	60	40	150	45	60 x 40	0,8	**4011004**
337	100	40	180	45	100 x 40	1,1	**4011003**
437	80	40	180	45	80 x 40	1,2	**4011006**
437	100	40	180	45	100 x 40	1,3	**4011005**

Start clamps for flat cable

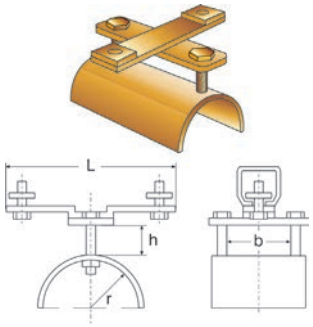

Type	B (mm)	H (mm)	L (mm)	R (mm)	Cable clamp (mm)	Weight (kg/st/m)	Article number
137E	55	20	107	25	55 x 20	0,3	**4013001**
337E	60	40	150	45	60 x 40	0,7	**4013004**
337E	100	40	150	45	100 x 40	0,8	**4013003**
437E	80	40	150	45	80 x 40	0,7	**4013006**
437E	100	40	150	45	100 x 40	0,8	**4013005**

Towing trolleys for flat cable

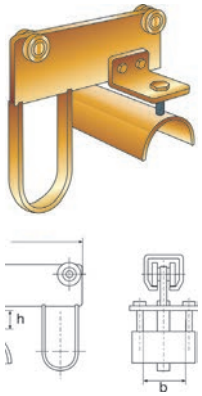

Type 157 is supplied with plastic wheels.

Type	B (mm)	H (mm)	L (mm)	R (mm)	Cable clamp (mm)	Weight (kg/st/m)	Article number
157M*	55	20	165	25	55 x 20	0,5	**4015001**
137M	55	20	165	25	55 x 20	0,6	**4016001**
337M	60	40	260	45	60 x 40	1,4	**4015004**
337M	100	40	260	45	100 x 40	1,5	**4015003**
437M	80	40	260	45	80 x 40	1,7	**4015006**
437M	100	40	260	45	100 x 40	1,8	**4015005**

Elephant RKL round cable trolleys



Elephant round cable trolleys are designed to relieve round power supply cables on cranes so they do not hang down along the track. Cable sag: approx. 60 to 1000 mm.

Features

- Quick and easy to install on a monorail, wall-mounted jib crane or column-mounted jib crane.

Types

- RKL 75–125 for rail or beam profile width from 75 to 125 mm.
- RKL 125–175 for rail or beam profile width from 125 to 175 mm.

Type	For rail profile	External min/max (mm)	For cable (mm)	Weight (kg/st/m)	Article number
RKL75-100	75-125	145 - 195	17-24	0,4	**4023003**
RKL125-150	125-175	193 - 242	17-24	0,5	**4023005**

Round cable trolleys for wire rope

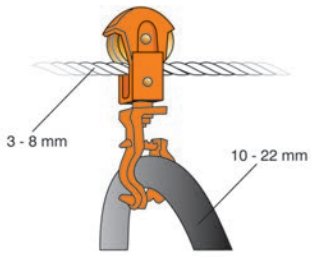

PVC round cable trolley for wire rope from 3 up to 8 mm.

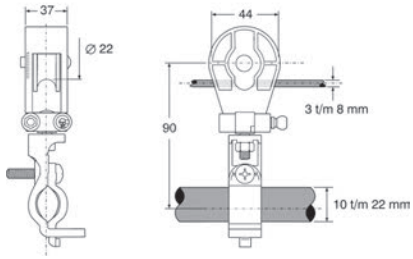

Type	For cable (mm)	Weight (kg/st/m)	Article number
RKW 3-8	12-20	0,1	**4023001**

Round cable trolleys



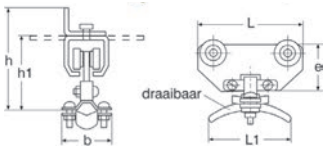

Type	For rail profile	E (mm)	H1 (mm)	H (mm)	L (mm)	L1 (mm)	For cable (mm)	B (mm)	Weight (kg/pc/m)	Article number
135	100	40	68	91	90	70	8-15	40	0,26	**4017001**
135	100	40	73	96	90	100	16-24	50	0,31	**4017003**
335	300	60	90	116	100	70	8-15	40	0,55	**4017011**
335	300	60	95	121	100	100	16-24	50	0,62	**4017013**
435	400	70	104	140	100	70	8-15	40	0,70	**4017021**
435	400	70	106	142	100	100	16-24	50	0,75	**4017023**
135/2	100	40	68	91	90	70	8-15	40	0,26	**4017051**
135/2	100	40	73	96	90	100	16-24	50	0,31	**4017053**
335/2	300	60	90	116	100	70	8-15	40	0,55	**4017061**
335/2	300	60	95	121	100	100	16-24	50	0,62	**4017063**
435/2	400	70	104	140	100	70	8-15	40	0,70	**4017071**
435/2	400	70	106	142	100	100	16-24	50	0,75	**4017073**

Start clamps for round cable



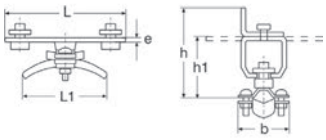

Note:
cable holder does not swivel

Type	For rail profile	E (mm)	H1 (mm)	H (mm)	L (mm)	L1 (mm)	For cable (mm)	B (mm)	Weight (kg/st/m)	Article number
135E	100	4	50	73	100	70	8-15	40	0,15	**4019001**
135E	100	4	55	78	100	100	16-24	50	0,20	**4019003**
335E	300	5	69	95	150	70	8-15	40	0,29	**4019011**
335E	300	5	74	100	150	100	16-24	50	0,33	**4019013**
435E	400	5	79	114	150	70	8-15	40	0,30	**4019021**
435E	400	5	84	119	150	100	16-24	50	0,33	**4019023**
135E/2	100	4	50	73	100	70	8-15	40	0,15	**4019051**
135E/2	100	4	55	78	100	100	16-24	50	0,20	**4019053**
335E/2	300	5	69	95	150	70	8-15	40	0,29	**4019061**
335E/2	300	5	74	100	150	100	16-24	50	0,33	**4019063**
435E/2	400	5	79	114	150	70	8-15	40	0,30	**4019071**
435E/2	400	5	84	119	150	100	16-24	50	0,33	**4019073**

Towing trolleys for round cable

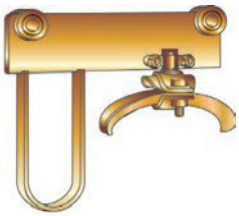

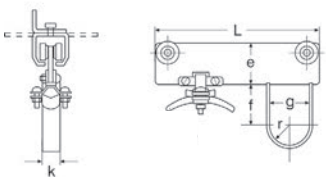

Note:
swivelling cable holder

Type	For rail profile	For cable (mm)	E (mm)	F (mm)	G (mm)	K (mm)	L (mm)	R (mm)	Weight (kg/pc/m)	Article number
135M	100	8-15	40	70	40	15	165	20	0,48	**4021001**
135M	100	16-24	40	70	40	15	165	20	0,51	**4021003**
335M	300	8-15	60	70	40	15	225	20	1,00	**4021011**
335M	300	16-24	60	70	40	15	225	20	1,05	**4021013**
435M	400	8-15	70	70	40	15	260	20	1,33	**4021021**
435M	400	16-24	70	70	40	15	260	20	1,38	**4021023**
135M/2	100	8-15	40	70	40	15	165	20	0,48	**4021051**
135M/2	100	16-24	40	70	40	15	165	20	0,51	**4021053**
335M/2	300	8-15	60	70	40	15	225	20	1,00	**4021061**
335M/2	300	16-24	60	70	40	15	225	20	1,05	**4021063**
435M/2	400	8-15	70	70	40	15	260	20	1,33	**4021071**
435M/2	400	16-24	70	70	40	15	260	20	1,38	**4021073**


REMA SR


REMA


















1500 KG

